Series 4, Built-in double oven
MBA533BB3B

Included accessories
3 x combination grid
1 x universal pan

Optional accessories
HEZ327000 Pizza stone, HEZ32WA00 Wireless food thermometer, HEZ530000 Half tray, HEZ531010 Baking tray, non-stick ceramic coated, HEZ532010 , HEZ538000 1fold telescopic rail, level independent, HEZ617000 , HEZ629070 Air Fry & Grill tray, HEZ631070 Baking tray, enamelled, HEZ632070 , HEZ633001 , HEZ633070 , HEZ633073 , HEZ634000 Baking and roasting grid, HEZ636000 Glass pan, HEZ638000 Full ext rails, level independent, HEZ664000 , HEZ915003 Glass roasting dish, 5,4 L

The built-in double oven with 3D hot air: achieve perfect baking and roasting results on multiple levels simultaneously.

- **3D Hotair:** even heat distribution for perfect results on up to three levels.
- **EcoClean Direct:** less cleaning effort thanks to a special coating which covers the rear wall of the lower oven.
- **Red LED display control:** easy-to-use thanks to the time functions.
- **Pop-out controls:** Make the front of the oven easy to clean and give it a sleek look.

Technical Data
Built-in / Free-standing : Built-in
Integrated Cleaning system : No
Dimensions : 888x594x550 mm
Dimensions of the packed product (HxWxD) : 960x660x690 mm
Control Panel Material : Glass
Door Material : Glass
Net weight : 49.2 kg
Usable volume of cavity : 71 l
Cooking method : Conventional heat, Full width grill, Hot Air, Hotair gentle, Hot air grilling
Cooking method second cavity : Conventional heat, Full width grill, Half width grill
Electronic timer : Yes
Included accessories : 3 x combination grid, 1 x universal pan
Broil Element Wattages cavity 1 : 2700 W
Convection Element Wattages cavity 1 : 2200 W

4 242005 465811

Series 4, Built-in double oven
MBA533BB3B

The built-in double oven with 3D hot air: achieve perfect baking and roasting results on multiple levels simultaneously.

Features

Top oven additional features

- Oven with 3 heating methods: conventional top/bottom heat, Large-area grill, Small area grill
- Temperature range 50 °C - 275 °C
- Cavity volume: 34 litre capacity

Main oven additional features

- 5 shelf positions
- Oven with 5 heating methods: 3D Hotair, conventional top and bottom heat, Hotair grilling, full width variable grill, Hotair gentle
- Temperature range 50 °C - 275 °C
- Cavity volume: 71 litre capacity

Level independent telescopic rails

- Available as an additional accessory

Design

- Rotary dial, Retractable control dials, round With steel trim
- Cavity (inner surface) top: Enamel grey
- Cavity (inner surface) bottom: enamel anthracite
- Extra large capacity oven

Cleaning

Top oven

- Full glass inner door

Main oven

- EcoClean Direct : back panel
- Full glass inner door

Programmes/functions

- LED-Display Control (Red)
- Electronic clock timer
- Automatic start
  Heating-up indicator
- Interior halogen light
- Straight bar handle

Top oven

- Door hinge small cavity: Drop down oven door

Main oven

- Door hinge big cavity: Drop down door
- Fast pre-heating function
- Integral cooling fan
- 3 x combination grid, 1 x universal pan

Technical information

- Nominal voltage: 220 - 240 V
- Total connected load electric: 5.9 KW
- Control panel lock

Top oven

- Energy efficiency rating (acc. EU Nr. 65/2014): B(at a range of energy efficiency classes from A+++ to D)
  Energy consumption per cycle in conventional mode: 0.83 kwh
  Number of cavities: Top Cavity
  Heat source: electrical

Main oven

- Energy efficiency rating (acc. EU Nr. 65/2014): B(at a range of energy efficiency classes from A+++ to D)
  Energy consumption per cycle in conventional mode: 0.83 kWh
  Energy consumption per cycle in fan-forced convection mode: 0.81 kwh
  Number of cavities: Main Cavity
  Heat source: electrical

Performance/technical information

- Appliance dimension (hxwxd): 888 mm x 594 mm x 550 mm
- Niche dimension (hxwxd): 875 mm - 888 mm x 560 mm - 568 mm x 550 mm
- “For-details-on-installation-and-ventilation requirements – please refer to the installation manual prior to fitting.”

Top oven

Main oven

- Oven with 5 heating methods: 3D Hotair, conventional top and bottom heat, Hotair grilling, full width variable grill, Hotair gentle

Accessories

Features

Top Oven

Main Oven
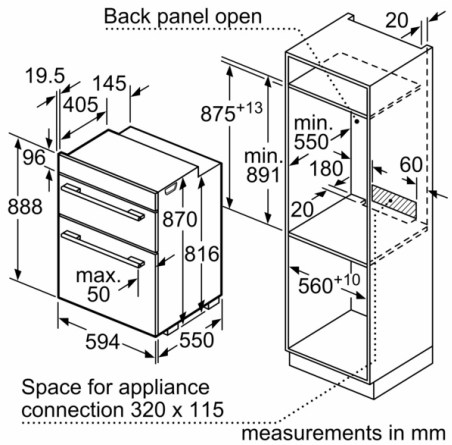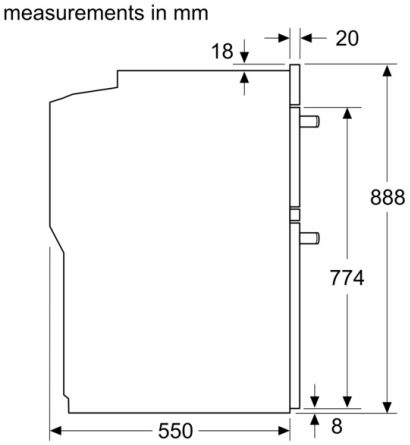
Series 4, Built-in double oven
MBA533BB3B