Electrolux

1000W Food Processor
SDA2838

User Manual

Electrolux

Contents

Page No.	
2	Contents
3	Reading and Storing the User Manual
3-5	Important Safety Instructions for Proper Use
6	Explanation of Symbols
7	What's in the Box
8-9	Description of Parts
10	Description of Control Panel
11	Before First Use of Your Food Processor
11	Using Your Food Processor
12-13	Using Your Food Processor - Chopping
14-15	Using Your Food Processor – Mixing Dough
16-18	Using Your Food Processor – Slicing/Shredding/Julienne
19-20	Using Your Food Processor – Whisking
21-22	Using Your Food Processor – Juicing
23-24	Using Your Food Processor – Blending
25	Using Your Food Processor – Grinding
26	Cleaning and Maintenance
26	Mains Plug
26	Technical Specification
27	Recycling Information
28	Troubleshooting Guide
29	Customer Support
30	FSC and Safety Marks
31	Recipe Ideas
32	Warranty

Reading and Storing the User Manual

Before using this product, please read through this manual carefully paying particular attention to the safety instructions. Failure to do so may result in personal injury or damage to the product.
Carefully save this instruction manual for future reference. Ensure the user manual is included when passing the product on to any third parties.

Important Safety Instructions for Proper Use

Whilst using electrical appliances, basic safety precautions should always be followed.

- **Read and familiarise yourself with all operating instructions before using this Food Processor.**
- Before plugging your unit into the mains, visually check that the unit is intact and has not suffered any transit damage.
- Check that the voltage indicated on the data plate corresponds with that of the local network before connecting the appliance to the mains power supply.
- Close supervision is required when using this appliance near children.
- Never leave this appliance within reach of children.
- This appliance shall not be used by children.
- Keep the appliance and its cord out of reach of children.
- Appliances can be used by persons with reduced physical, sensory or mental capabilities or lack of experience and knowledge if they have given supervision or instruction concerning use of the appliance in a safe way and understand the hazards involved.
- Children shall not play with the appliance.

Important Safety Instructions for Proper Use

- Children less than 3 years should be kept away unless continuously supervised.
- **DO NOT** immerse the appliance or its cord in water or any other liquids.
- **DO NOT** leave the appliance unattended during use.
- **DO NOT** leave the appliance unattended whilst connected to the mains supply.
- Always use this appliance on a solid, level, non-flammable surface.
- **DO NOT** use this appliance outdoors.
- It is imperative to unplug the power cord after the appliance has been used, before it is cleaned and whilst being repaired.
- Repairs to electrical appliances should only be performed by qualified personnel. Improper repairs may place user at serious risk.
- **DO NOT** operate this appliance with a damaged plug or cord, after a malfunction or after being dropped or damaged in any way.
- Regular, periodic checks should be carried out on the power cord to ensure no damage is evident. Should there be any signs of damage the appliance should not be used.
- If the power cord is damaged, it should only be replaced by the manufacturer or a suitable qualified after-sales-service in order to avoid a hazard.
- **DO NOT** allow the power cord to hang over sharp edges or come in contact with hot surfaces.
- **DO NOT** run the mains cable under carpets, rugs, etc.
- Allow the unit to cool before storage.
- Always disconnect the unit from the supply if it is left unattended and before assembling, disassembling or cleaning.

Important Safety Instructions for Proper Use

- This appliance is intended for household use only and should not be used for industrial purposes.
- **DO NOT** use any accessories or attachments with this appliance other than those supplied or recommended by the supplier.
- **DO NOT** use this appliance for anything other than its intended use.
- **DO NOT** push objects into any openings as damage to the appliance and/or electric shock may occur.
- Switch off the appliance and disconnect from the supply before changing accessories or approaching parts that move in use.
- Grasp the plug, not the cord.
- **DO NOT** touch the blades whilst the Food Processor is connected to the mains.
- Wash the blades in warm soapy water, rinse and dry thoroughly.
- **CAUTION:** the blades on this Food Processor are very sharp; extreme caution should be taken whilst cleaning.

Explanation of Symbols

The following warning symbols or words are used in this instruction manual:

UK CA	Products labelled with UK Conformity Assessment identifies products conforming to UK statutory requirements.
CE	Products labelled with this symbol conform to applicable provisions of the European Economic Area.
	You should now recycle your waste electrical goods and in doing so help the environment. This symbol means waste electrical products at the end of their useful life should not be disposed of with normal household waste and not sent to landfill. Please ensure it is taken to a suitable facility for disposal. Check with your Local Authority or retailer for recycling advice or visit www.recycle-more.co.uk or www.weeeireland.ie enter your postcode to find out your nearest recycling site.
~	This symbol indicates that the supply uses an alternating current mains supply.
WARNING!	This designates a hazard with moderate risk, which may result in severe injury if not adhered to.
	This Class II symbol indicates that this product is double insulation and therefore does not require an earth connection.

What's in the Box

- Motor Unit
- Juicer Cone
- Juicer Tray
- Shredding Disc
- Slicing/Julienne Disc
- Juicer & Disc Spindle
- Small Pusher
- Large Pusher
- Bowl Lid
- Dough Blade
- Metal Blade
- Bowl
- Measuring Cup
- Jug Lid
- Blender Jug
- Whisk
- Grinder Cup
- Grinder Blades
- User Manual (This Booklet)

Electrolux

Description of Parts

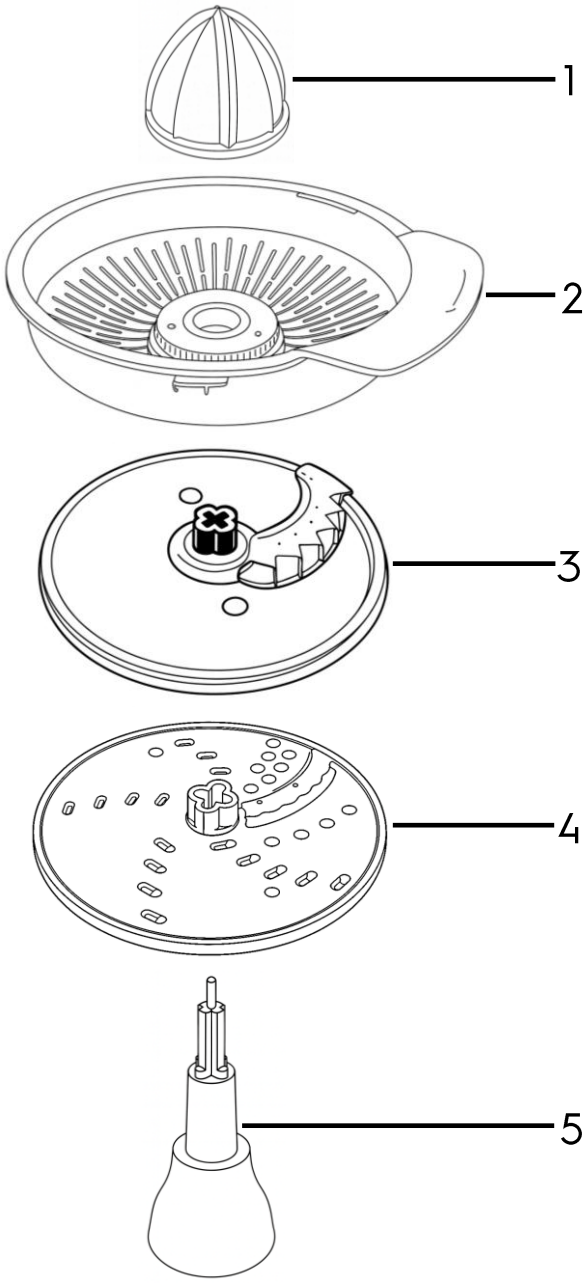

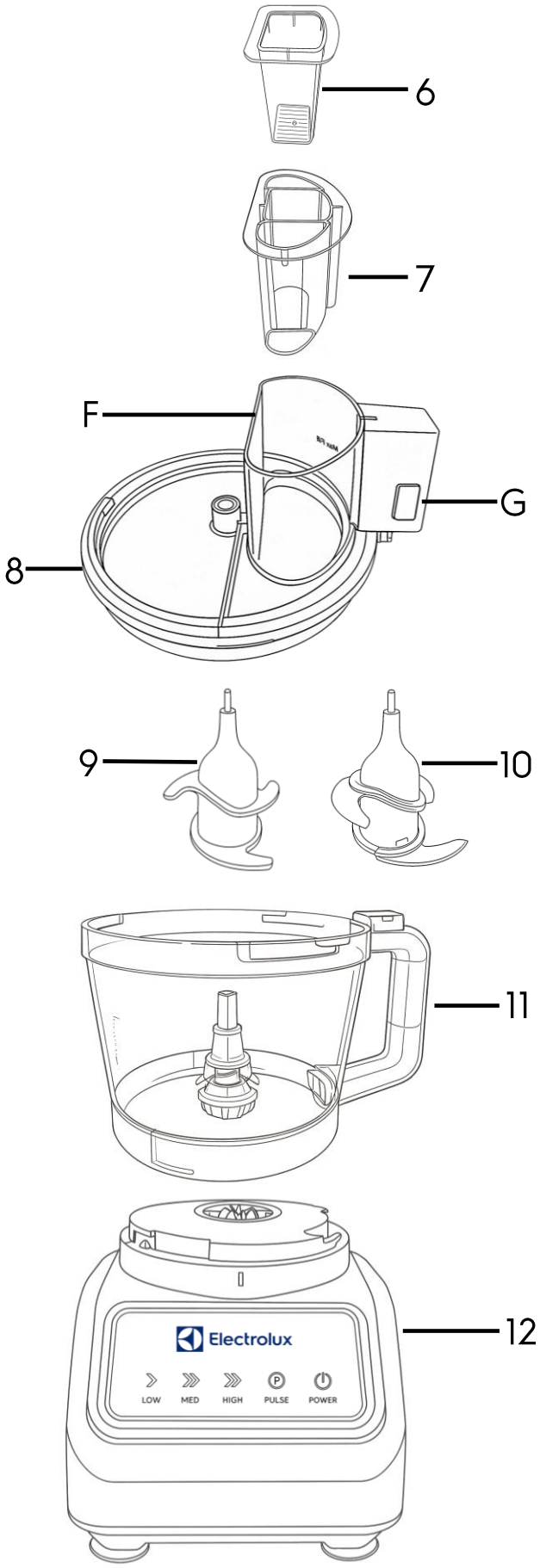

1. Juicer Cone
2. Juicer Tray
3. Shredding Disc
4. Slicing/Julienne Disc
5. Juicer & Disc Spindle
6. Small Pusher
7. Large Pusher
8. Bowl Lid
9. Dough Blade
10. Metal Blade
11. Bowl
12. Motor Unit

Description of Parts

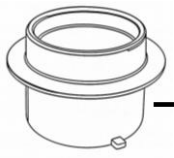

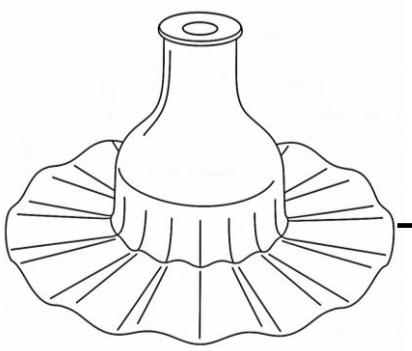

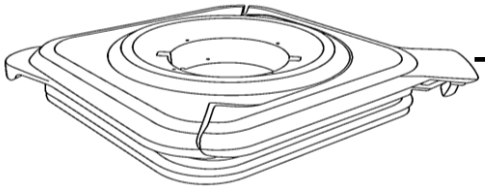

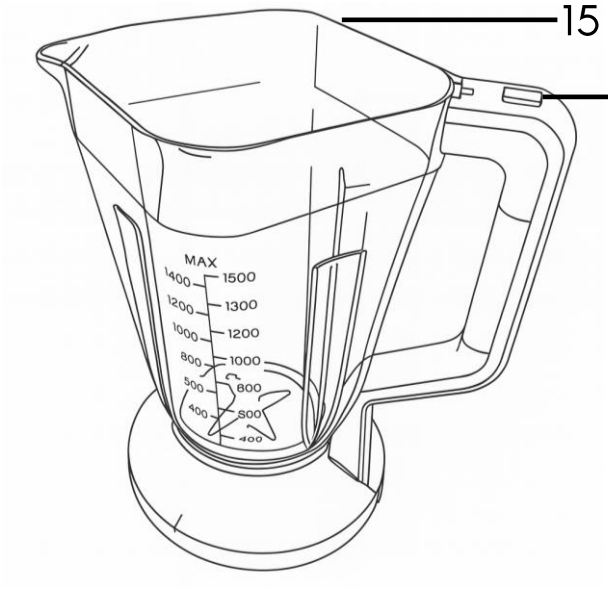

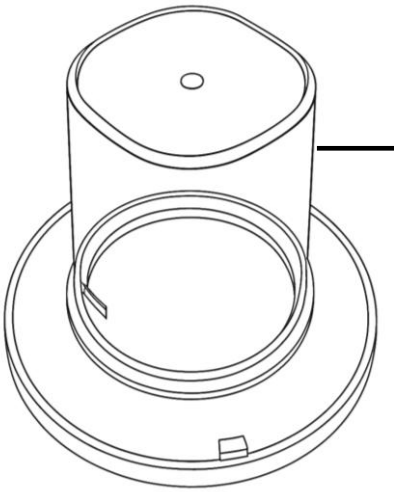

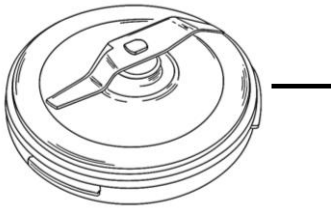

13. Measuring Cup
14. Jug Lid
15. Blender Jug
16. Whisk
17. Grinder Cup
18. Grinder Blades

Description of Control Panel

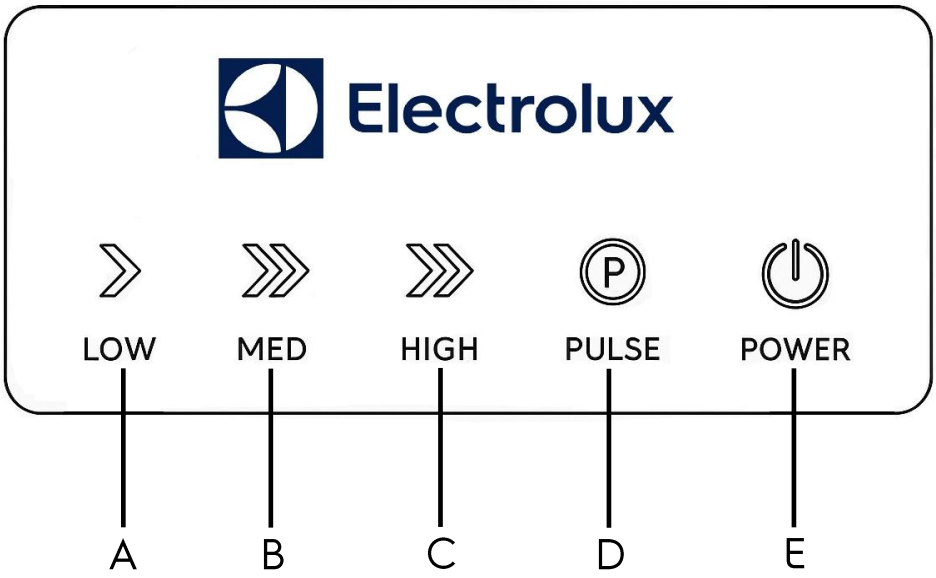

A. Low Speed Button
B. Medium Speed Button
C. High Speed Button
D. Pulse Button
E. Power Button

Before First Use of Your Food Processor

Remove all packaging materials and discard responsibly.
Before using the Food Processor for the first time, wash the Glass Jug, the Lid and the Grinder in warm soapy water and dry thoroughly afterwards. Do not immerse the Jug Blender or its cord in water or any other liquids.

WARNING! – the blades in this Food Processor are extremely sharp and care must be taken whilst cleaning.

DO NOT under any circumstances use the **Blender Jug** (15) to process hot foods or liquids.

Using Your Food Processor

NB This appliance is equipped with a safety lock system which will prevent the motor starting without correct installation of the accessories.

CAUTION: Do not connect to the mains supply until the food processor is fully assembled.

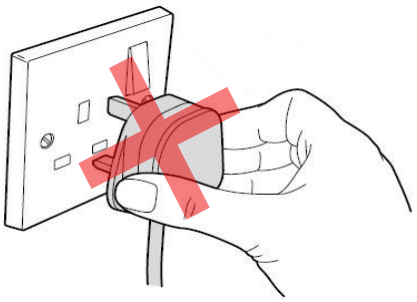

Using Your Food Processor - Chopping

1. Place the **Motor Unit** (12) onto a solid, level, non-flammable surface.

2. Place the **Bowl** (11) onto the **Motor Unit** (12) ensuring that the bowl handle is to the right-hand side.

3. Rotate the **Bowl** (11) clockwise until a click is heard to confirm it is locked in place.

4. Place the **Metal Blade** (10) over the spindle in the **Bowl** (11). Rotate the blade a little until it drops into place.

5. Remove the bones and tendons from beef or pork and cut them into small cubes of about 25mm (1 Inch) and then place them into the **Bowl** (11).
   NB Do not process more than 400g (14oz) of food at a time.

6. Place the **Bowl Lid** (8) onto the **Bowl** (11) by rotating clockwise until it clicks into place.

7. Place the **Large Pusher** (7) into the chute in the top of the **Bowl Lid** (8).

8. In turn, push the **Small Pusher** (6) into the **Large Pusher** (7)

9. Alternatively, food can be fed through the feeding **Chute** (F) after attaching the **Bowl Lid** (8). Food can be pressed in with the **Large Pusher** (7).
   NB Do not process more than 400g (14oz) of food at a time.

WARNING! - the **Metal Blade** (10) in this blender is extremely sharp and care must be taken whilst handling.

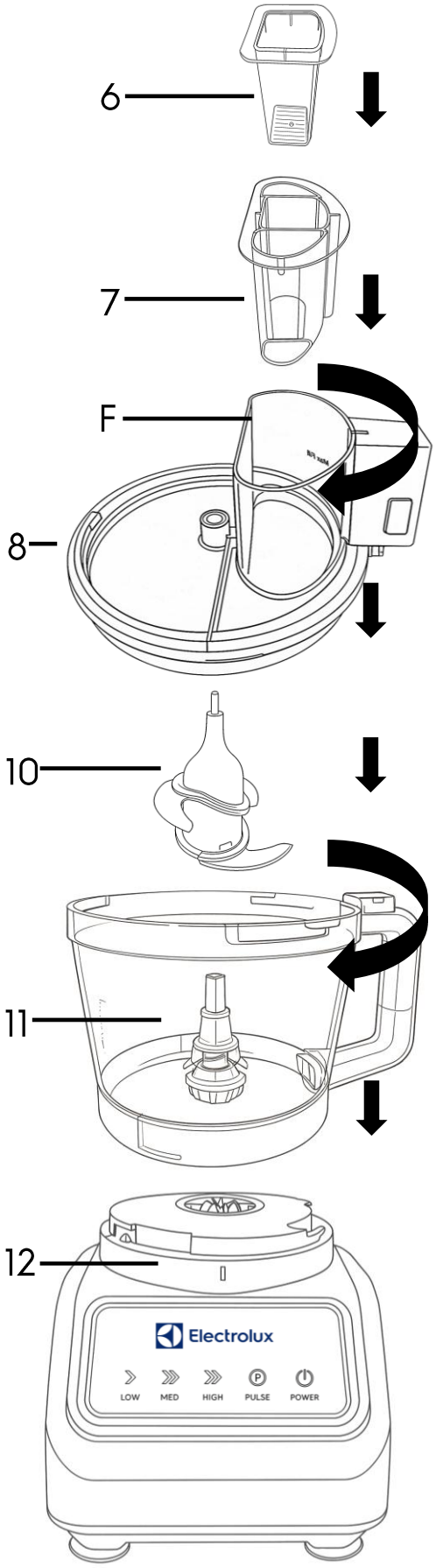

Using Your Food Processor - Chopping

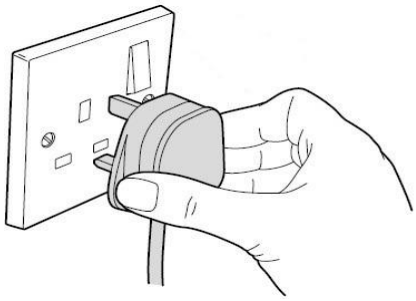

10. Insert the mains plug into the nearest socket. The icons (A–E) on the control panel will illuminate.
    NB if the icons flash instead of constantly illuminating, check the **Bowl** (11), **Bowl Lid** (8) and the **Large Pusher** (7) are correctly in place as described above.

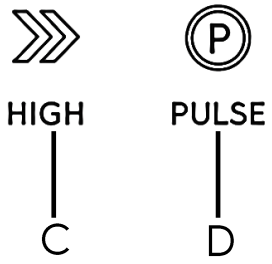

11. Press the **Pulse Button** (D), the processor will pulse chop the food for 1 second intervals 10 times, after which the unit will automatically stop.

12. Next press the **High-Speed Button** (C), the processor will chop at high speed for 1 minute after which it will automatically stop. If more chopping is required repeat the above process.

    NB an interval of at least 2 minutes must be maintained between two consecutive cycles.

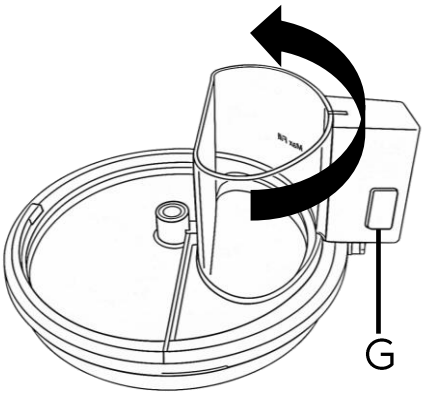

13. Once complete, press the release button (G) and rotate the **Lid** (8) anticlockwise and remove from the **Bowl** (11).

14. Carefully remove the **Metal Blade** (10) from the **Bowl** (11).

15. Grasp the **Bowl** (11) by the handle, rotate the Bowl anticlockwise and remove it from the **Motor Unit** (12).

Using Your Food Processor – Mixing Dough

1. Place the **Motor Unit** (12) onto a solid, level, non-flammable surface.

2. Place the **Bowl** (11) onto the **Motor Unit** (12) ensuring that the bowl handle is to the right-hand side.

3. Rotate the **Bowl** (11) clockwise until a click is heard to confirm it is locked in place.

4. Place the **Dough Blade** (9) over the spindle in the **Bowl** (11). Rotate the blade a little until it drops into place.

5. Place flour and water in a suitable ratio (recommended 5:3) into the **Bowl** (11). **NB** the maximum amount of flour is 400g (14oz) and the maximum amount of water is 240g (8.5oz).

6. Place the **Bowl Lid** (8) onto the **Bowl** (11) by rotating clockwise until it clicks into place.

7. Place the **Large Pusher** (7) into the **Chute** (F) in the top of the **Bowl Lid** (8).

8. In turn, push the **Small Pusher** (6) into the **Large Pusher** (7)

   NB It is recommended to mix no more than 400g of flour and 240g of water at a time.

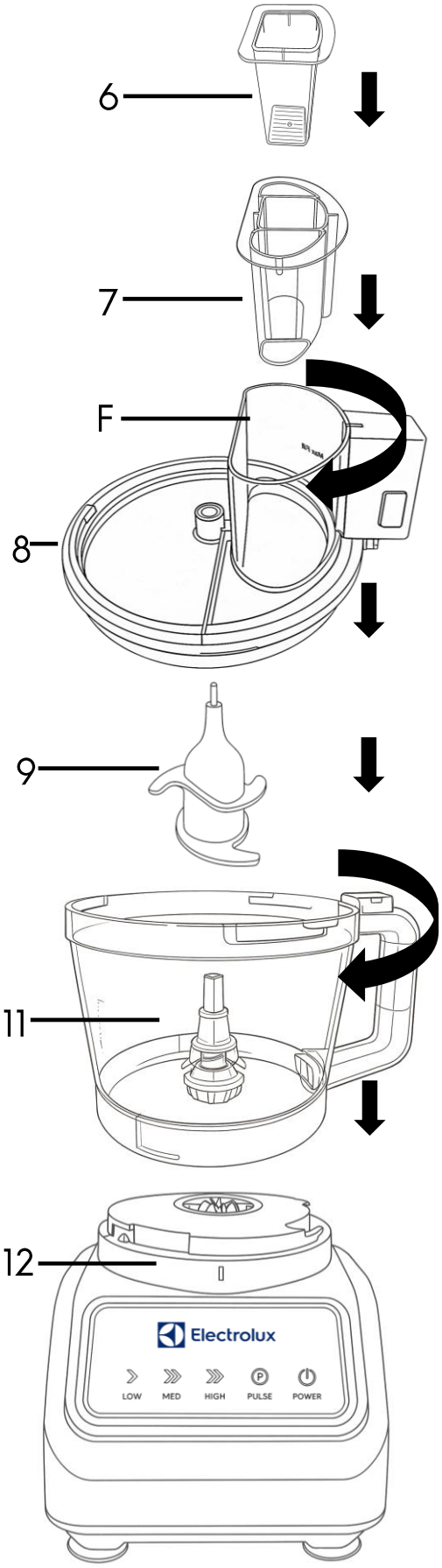

Using Your Food Processor – Mixing Dough

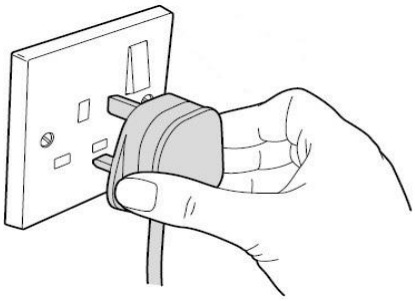

16. Insert the mains plug into the nearest socket. The icons (A–E) on the control panel will illuminate.
    NB if the icons flash instead of constantly illuminating, check the **Bowl** (11), **Bowl Lid** (8) and the **Large Pusher** (7) are correctly in place as described above.

17. Press the **Low-Speed Button** (C), the processor will chop at low speed for 1 minute after which it will automatically stop. If more mixing is required repeat the above process.

    NB an interval of at least 2 minutes must be maintained between two consecutive cycles.

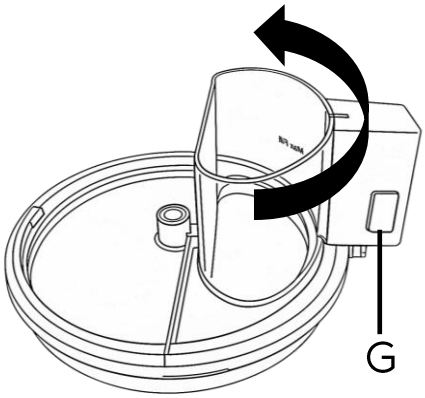

12. Once complete, press the release button (G) and rotate the **Lid** (8) anticlockwise and remove from the **Bowl** (11).

18. Carefully remove the **Dough Blade** (9) from the Bowl (11).

19. Grasp the **Bowl** (11) by the handle, rotate the Bowl anticlockwise and remove it from the **Motor Unit** (12).

Using Your Food Processor – Slicing/Shredding/Julienne

1. Place the **Motor Unit** (12) onto a solid, level, non-flammable surface.

2. Place the **Bowl** (11) onto the **Motor Unit** (12) ensuring that the bowl handle is to the right-hand side.

3. Rotate the **Bowl** (11) clockwise until a click is heard to confirm it is locked in place.

4. Place the **Juicer & Disc Spindle** (5) over the spindle in the **Bowl** (11). Rotate the spindle a little until it drops into place.

5. Select either the **Shredding Disc** (3) or the **Slicing/Julienne Disc*** (4) and slide it over the **Juicer & Disc Spindle** (5). Ensure that the disc fits securely on the spindle.

6. Place the **Bowl Lid** (8) onto the **Bowl** (11) by rotating clockwise until it clicks into place.

7. Place the **Large Pusher** (7) into the chute in the top of the **Bowl Lid** (8).

8. In turn, push the **Small Pusher** (6) into the **Large Pusher** (7).

9. Cut food such as potatoes, cucumber or carrot into cubes which will fit through the feeding **Chute** (F). Feed the food through the chute using the **Large Pusher** (7) to push the food through.

   NB do not stack food in the **Chute (**F) above the 'Max' line, otherwise the unit will not operate.

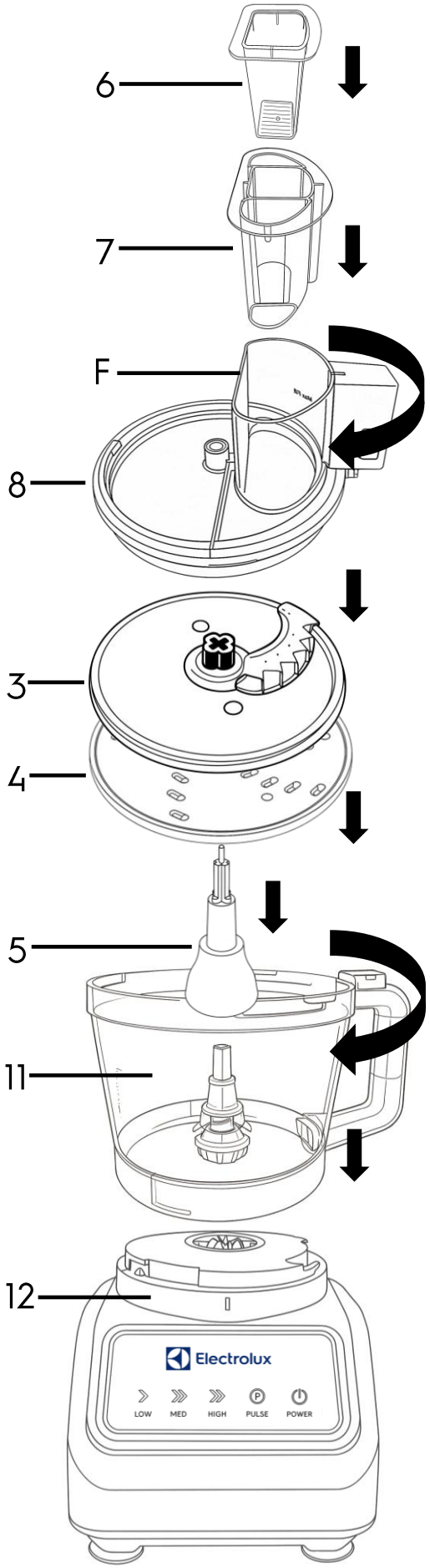

Using Your Food Processor - Slicing/Shredding/Julienne

10. Use the **Small Pusher** (6) to process smaller food items.

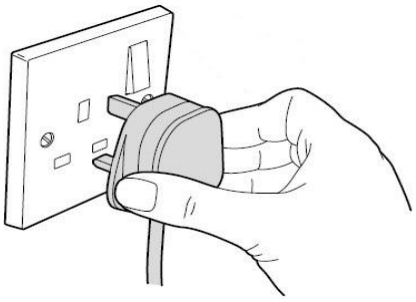

11. Insert the mains plug into the nearest socket. The icons (A-E) on the control panel will illuminate.

    NB if the icons flash instead of constantly illuminating, check the **Bowl** (11), **Bowl Lid** (8) and the **Large Pusher** (7) are correctly in place as described as above.

12. Press **Medium Speed Button** (B), at the same time gently push the **Large Pusher** (7) downwards until the food is processed. After 1 minute the processor will automatically stop. If more processing is required repeat the above process.

    NB an interval of at least 2 minutes must be maintained between two consecutive cycles.

    WARNING! Always use the pusher(s) whilst feeding food into the **Chute** (F), never push food with your fingers.

13. Once complete, press the release button (G) and rotate the **Lid** (8) anticlockwise and remove from the **Bowl** (11).

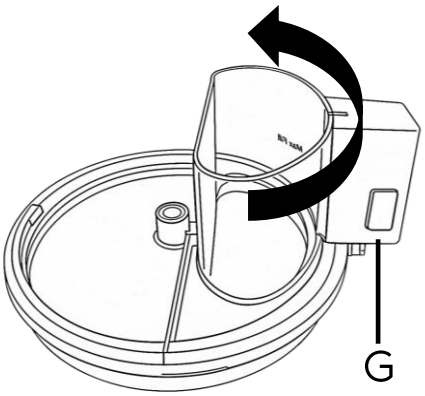

14. Carefully remove the Disc and the **Juicer & Disc Spindle** (5) from the **Bowl** (11).

15. Grasp the **Bowl** (11) by the handle, rotate the Bowl anticlockwise and remove it from the **Motor Unit** (12).

Using Your Food Processor – The Slicing/Julienne Disc

* The **Slicing/Julienne Disc** (4) is double sided, one side is for slicing and the other side is for julienne.

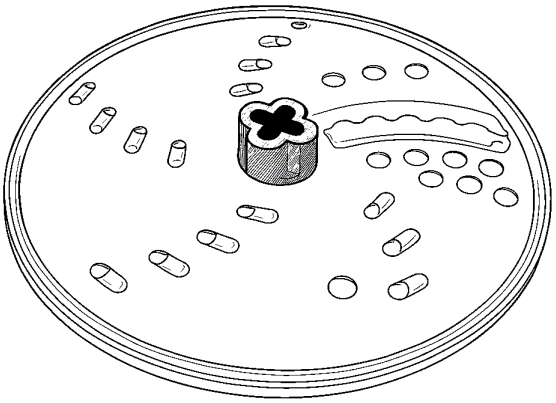

Left: The top image shows the Julienne side of the **Slicing/Julienne Disc** (4).

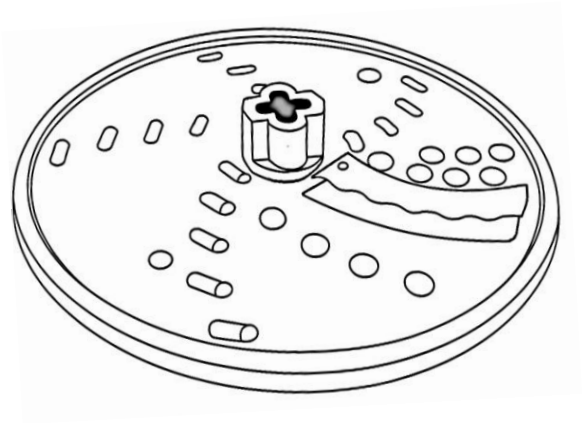

The bottom image shows the slicing side of the **Slicing/Julienne Disc** (4). Note the slicing blade is uppermost.

Using Your Food Processor – Whisking

1. Place the **Motor Unit** (12) onto a solid, level, non-flammable surface.

2. Place the **Bowl** (11) onto the **Motor Unit** (12) ensuring that the bowl handle is to the right-hand side.

3. Rotate the **Bowl** (11) clockwise until a click is heard to confirm it is locked in place.

4. Place the **Whisk** (16) over the spindle in the **Bowl** (11). Rotate the whisk a little until it drops into place.

5. Place the **Bowl Lid** (8) onto the **Bowl** (11) by rotating clockwise until it clicks into place.

6. Place the **Large Pusher** (7) into the **Chute** (F) in the top of the **Bowl Lid** (8).

7. In turn, push the **Small Pusher** (6) into the **Large Pusher** (7).

8. Insert the food to be whisked in through the **Chute** (F).

   NB do not stack food in the **Chute (**F) above the 'Max' line, otherwise the unit will not operate.

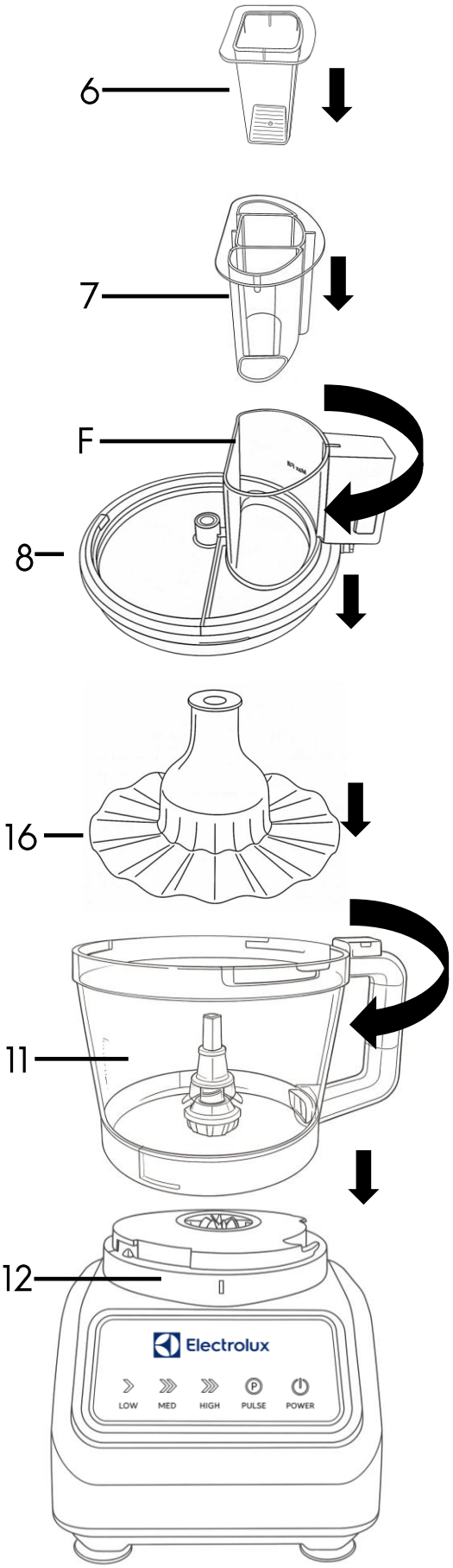

Using Your Food Processor – Whisking

9. Insert the mains plug into the nearest socket. The icons (A–E) on the control panel will illuminate.

   NB if the icons flash instead of constantly illuminating, check the **Bowl** (11), **Bowl Lid** (8) and the **Large Pusher** (7) are correctly in place as described as above.

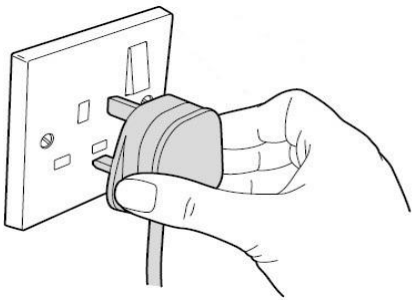

10. Press **High Speed Button** (C), if necessary, gently push the **Large Pusher** (7) downwards until the food is through. After 1 minute the processor will automatically stop. If more whisking is required repeat the above process.

    NB an interval of at least 2 minutes must be maintained between two consecutive cycles.

    WARNING! Always use the pusher(s) whilst feeding food into the **Chute** (F), never push food with your fingers.

11. Once complete, press the release button (G) and rotate the **Lid** (8) anticlockwise and remove from the **Bowl** (11).

12. Carefully remove the **Whisk** (16) from the **Bowl** (11).

13. Grasp the **Bowl** (11) by the handle, rotate the Bowl anticlockwise and remove it from the **Motor Unit** (12).

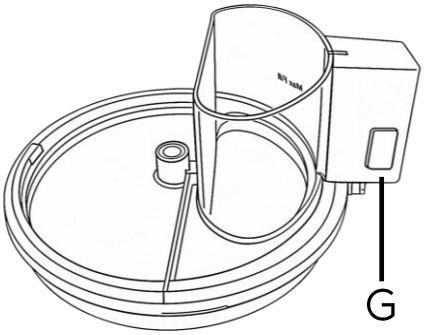

Using Your Food Processor – Juicing

1. Place the **Motor Unit** (12) onto a solid, level, non-flammable surface.

2. Place the **Bowl** (11) onto the **Motor Unit** (12) ensuring that the bowl handle is to the right-hand side.

3. Rotate the **Bowl** (11) clockwise until a click is heard to confirm it is locked in place.

4. Place the **Juicer & Disc Spindle** (5) over the spindle in the **Bowl** (11). Rotate the spindle a little until it drops into place.

5. Place the **Juicer Tray** (2) on top of the **Bowl** (11). Rotate the tray clockwise until it locks into place.

6. Place the **Juicer Cone** (1) onto the **Juicer & Disc Spindle** (5) protruding through the **Juicer Tray** (2).

7. Cut the fruit in half before juicing.

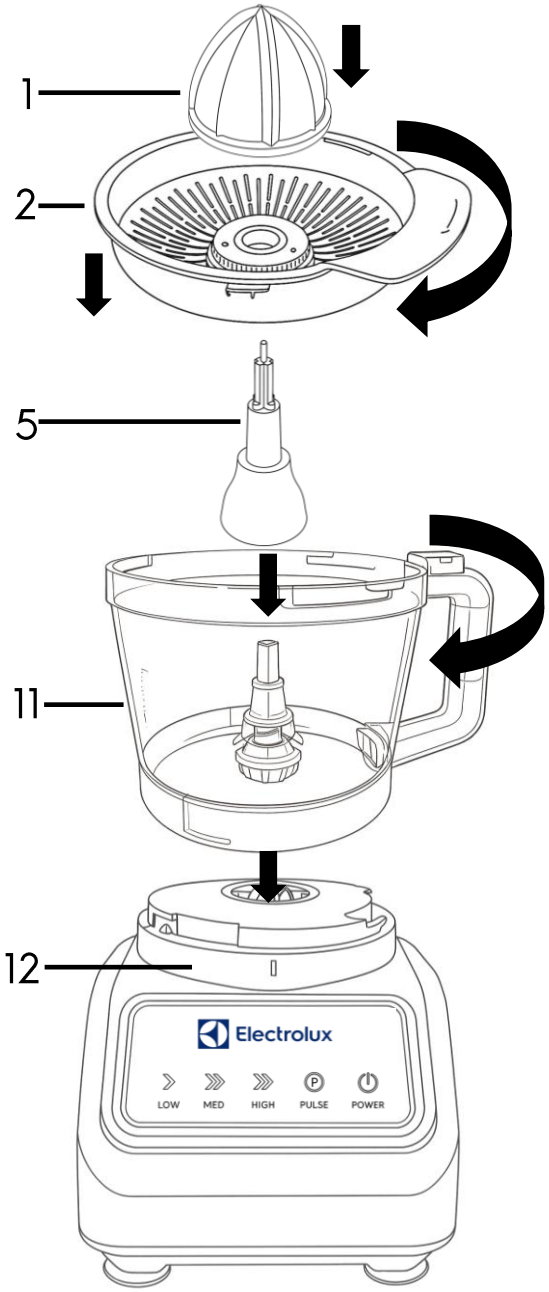

Using Your Food Processor – Juicing

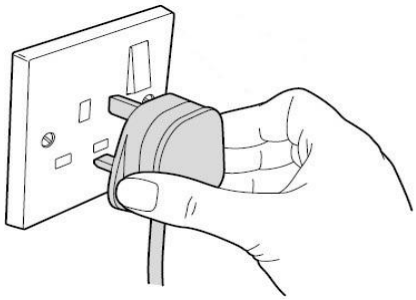

8. Insert the mains plug into the nearest socket. The icons (A–E) on the control panel will illuminate.

   NB if the icons flash instead of constantly illuminating, check the **Bowl** (11) and the **Juicer Tray** (2) are correctly in place as described above.

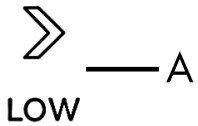

9. Press **Low Speed Button** (A), push the cut part of the fruit against the **Juicer Cone** (1), the juice will drain through the **Juicer Tray** (2) and into the **Bowl** (11). After 1 minute the processor will automatically stop. If more juicing is required repeat the above process.

   NB an interval of at least 2 minutes must be maintained between two consecutive cycles.

10. Remove the **Juicer Tray** (2) by rotating it anticlockwise.

11. Lift out the **Juicer & Disc Spindle** (5).

12. Grasp the **Bowl** (11) by the handle, rotate the Bowl anticlockwise and remove it from the **Motor Unit** (12).

Using Your Food Processor – Blending

1. Place the **Motor Unit** (12) onto a solid, level, non-flammable surface.

2. Place the **Blender Jug** (15) onto the **Motor Unit** (12) ensuring that the jug handle is to the right-hand side.

3. Rotate the **Blender Jug** (15) clockwise until a click is heard to confirm it is locked in place.

4. To prepare for blending, cut the food into cubes approximately 15mm square.

5. Place the cut food cubes into the **Blender Jug** (15) ensuring that the 'MAX' mark is not exceeded.

6. Add water to the jug using a ratio of food to water of 3:2. Again ensure that the 'MAX' mark is not exceeded.

7. For Crushed Ice, fill a dry **Blending Jug** (15) with eight solid ice cubes (-18°C, size 20x20x20mm).

8. Place the **Jug Lid** (14) onto the jug by hooking the lid over the jug spout and pushing down firmly until it clicks in place.

9. Screw the **Measuring Cup** (13) into the **Jug Lid** (14) by rotating clockwise.

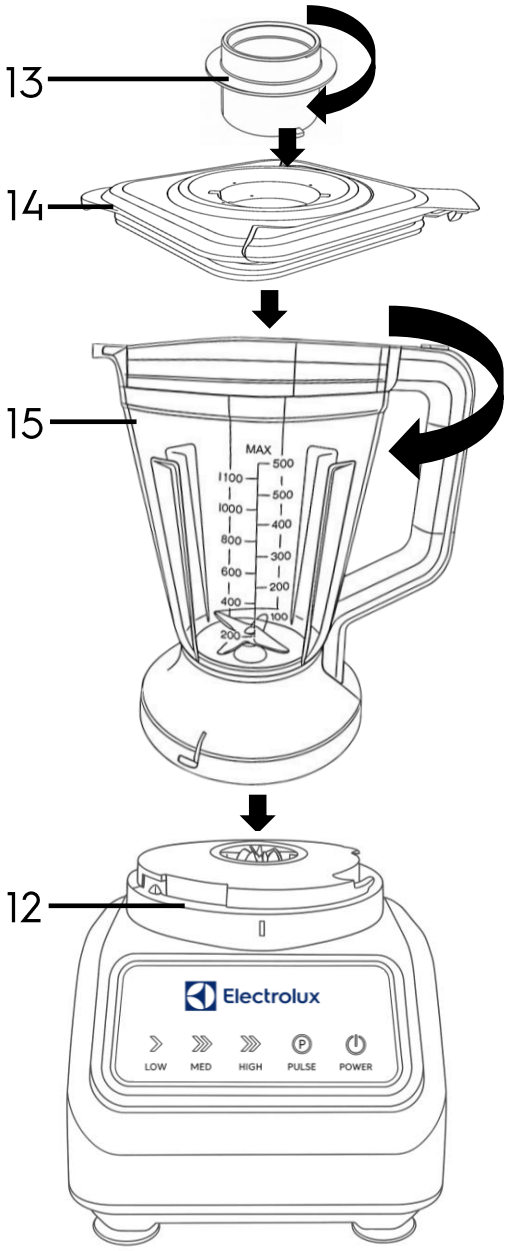

Using Your Food Processor – Blending

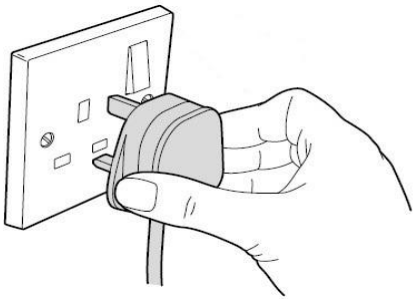

10. Insert the mains plug into the nearest socket. The icons (A–E) on the control panel will illuminate.

    NB if the icons flash instead of constantly illuminating, check the **Blender Jug** (15) is correctly in place as described above.

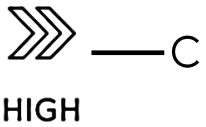

11. To blend food, press the **High Speed Button** (C). After 1 minute the processor will automatically stop. If more blending is required repeat the above process.

12. To crush Ice, press the **High Speed Button** (C) and allow the blender to run for 30 seconds and press the **Power Button** (E) to stop the ice crushing. If more ice crushing is required repeat the above process.

    NB an interval of at least 2 minutes must be maintained between two consecutive cycles.

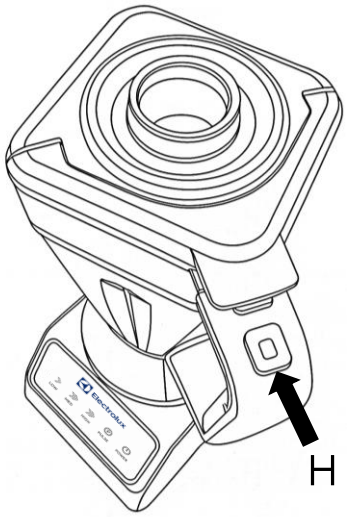

13. Press the button (H) on the **Blender Jug** (15) handle to remove the lid.

    NB during blending, additional ingredients can be added through **Measuring Cup** (13) by twisting it off anticlockwise, adding the ingredients before replacing the Cup.

- **DO NOT** under any circumstances use the **Blender Jug** (15) to process hot foods or liquids.
- **DO NOT** operate the blender without liquid in the jug.

Using Your Food Processor – Grinding

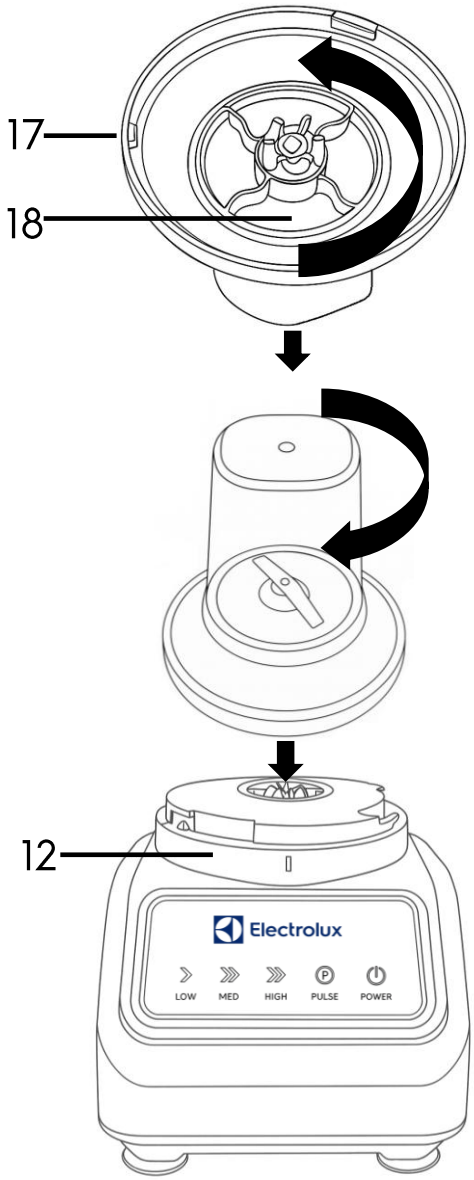

1. Place the **Motor Unit** (12) onto a solid, level, non-flammable surface.

2. Turn the **Grinder Cup** (17) upside down and fill with the coffee beans to be ground, take care not to exceed the 'MAX' mark.
   NB approximately 2/3 of the cup capacity when inverted.

3. Screw the **Grinder Blades** (18) onto the base of the **Grinder Cup** (17) anticlockwise.

4. Place the assembled grinder onto the **Motor Unit** (12) and rotate clockwise until it clicks into place.

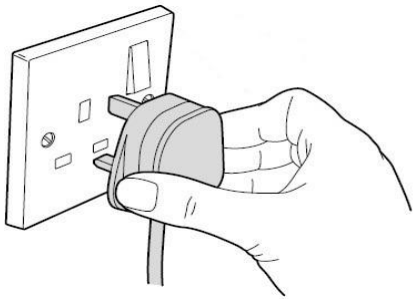

5. Insert the mains plug into the nearest socket. The icons (A–E) on the control panel will illuminate.

   NB if the icons flash instead of constantly illuminating, check the Grinder is correctly in place as described above.

6. Press the **High Speed Button** (C). After 1 minute the processor will automatically stop. If more grinding is required repeat the above process.

   NB an interval of at least 2 minutes must be maintained between two consecutive cycles.

Care & Maintenance

- Always disconnect the Food Processor from the mains power supply before cleaning.
- Clean outside of the Food Processor with a clean damp cloth.
- Use a small brush to remove particles lodged around the blades. Care must be taken whilst cleaning the blades as they are very sharp.
- Wash the other accessories in warm soapy water and rinse thoroughly.
- Do not submerge the Motor Unit in water or any other liquids.
- Never clean any part of the Food Processor with harsh chemicals or abrasive cleaners.
- Dishwasher use is not recommended as this will reduce the useful life of the accessories.

Mains Plug

If your appliance is supplied with a non-rewireable plug fitted to the mains lead and should the fuse needed replacing, you must use an ASTA approved one (conforming to BS 1362 of the same rating). Never use a plug with the fuse cover missing. If in doubt, consult a qualified electrician.

If you need to remove the plug -DISCONNECT FROM THE MAINS- and then cut it off the mains lead and immediately dispose of it safely. Never attempt to reuse the plug or insert it into a socket outlet as there is a danger of electric shock.

Technical Specification

Model Number	SDA2838
Rated Voltage	220-240V~ 50/60Hz
Rated Power	1000W
Protection Class	II
Power consumption of equipment in Standby Mode shall not exceed 0,50W	0.23W
This Equipment complies with Annex III of the Commission Regulation (EU) 2023/826	

Recycling Information

Disposal of the Packaging

Dispose of paper and cardboard in appropriate paper re-cycling facilities. Dispose of recyclable plastics in appropriate plastic re-cycling facilities. Dispose of non-recyclable plastics in the appropriate plastics collection service.

Disposal of the Product

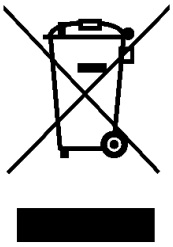

You should now recycle your waste electrical goods and in doing so help the environment. This symbol means waste electrical products at the end of their useful life should not be disposed of with normal household waste and not sent to landfill. Please ensure it is taken to a suitable facility for disposal. Check with your Local Authority or retailer for recycling advice or visit www.recycle-more.co.uk or www.weeeireland.ie to find your nearest recycling point.

Troubleshooting Guide

Problem	Possible Cause	Possible Solution
Won't Switch on	Not plugged in properly	Ensure the power cord is securely inserted into the wall socket.
	Large Pusher (7) not pushed fully home into the Bowl Lid (8)	Ensure the Large Pusher (7) is pushed all the way in.
	Faulty wall socket	Try plugging the food processor into a different socket
	Lid not correctly seated onto the glass jug	Ensure the lid is properly aligned and the lid socket and plug are properly connected
	Blown Fuse or damaged cable	Inspect the cord for damage. Replace if frayed or melted. Check home fuse box or circuit breaker
Blend is not as required (ingredients are too large)	Vegetables/Fruit not cut small enough.	Pre-chop large vegetables into 15mm cubed pieces. Ice cubes 20mm cubes
Blend is not as fine as required	Too many ingredients or overfilled	Do not exceed the maximum capacity. Remove some ingredients and try again.
	blending long enough/too lower speed	Increase processing/blending time/ speed.
Loud or unusual noise	Foreign object inside jug	Unplug and check the inside of the jug for utensils, bones, or hard debris.
	Loose blades or motor issues	If the sound is grinding or screeching, stop use immediately.

Customer Support

Should you require any product information, replacement parts or accessories, please contact our customer care team on 0161 831 7879 (8.30am-4.30pm Monday to Thursday, 8.00am-4.00pm Friday) and select option 3 or by contacting us via email:
help@electroluxsmalldomesticappliance.co.uk

- Replacement parts and accessories are guaranteed for 1 year from the date of purchase.

- It is important to note that your warranty becomes invalid should non Electrolux parts or accessories be used with this appliance.

FSC and Safety Marks

Insert FSC Logo here

Recipe Ideas

WARRANTY

Thank you for purchasing your Electrolux Product.
As part of our commitment to quality, we are offering you an extra 4 years warranty in addition to your 1 year guarantee

Your Electrolux product is guaranteed for 1 year from the date of original purchase, with proof of purchase or receipt. If any defect should occur due to faulty workmanship or material, your faulty product should be returned to the place of purchase, replacement or refund is at the discretion of the retailer.

The guarantee is subject to the following provisions:

- The product must be correctly installed and operated in accordance with the requirements contained in the instruction manual.
- The product must be used solely for domestic purposes.
- It does not cover general wear and tear, damage, misuse or any consumable parts.
- The guarantee will be rendered invalid if the product is re-sold or has been damaged through inexpert repair.
- The guarantee is only valid within the UK and Eire.

Your standard 1 year guarantee will only be extended to the maximum available for your individual product upon registration. (Note: products must be registered individually and covers the main body and housing). If you do not register your product within 28 days of the original purchase date, your product will only be guaranteed for 1 year.

To validate your extended 4-year warranty*please register your purchase online within 28 days of the original purchase date by registering at:

help@electroluxsmalldomesticappliance.co.uk
or
Contact Us: www.electroluxfloorcare-sda.co.uk

*Your extended warranty is only valid with proof of purchase receipt and subject to the conditions outlined above.

Produced and imported under licence by
Eurosonic Group Limited
Brightgate House
1 Brightgate Way
Manchester M32 0TB UK
EU Rep: EuroSonic Magppie (ESM) Ltd. Ireland D05 X006
www.esgltd.com
ELECTROLUX is a pending or registered trademark used under license from AB Electrolux (publ)
Made in China