SOJAG

produits saisonniers • seasonal products

Sojag code : 999-9163377

CUP/UPC code :772830163377

Costco code: 1043489

QUESTIONS? 0 800 032-4324

Assembly Manual / Guide d'assemblage / Manual de ensamblaje / 조립설명서 / Montageanleitung

IMPORTANT, RETAIN FOR FUTURE REFERENCE: READ CAREFULLY
IMPORTANT : CONSERVER POUR RÉFÉRENCE FUTURE ET LIRE ATTENTIVEMENT
IMPORTANTE : CONSERVE PARA REFERENCIA FUTURA. LEA CUIDADOSAMENTE ANTES
Wichtig: für den zukünftigen Gebrauch aufbewahren: sorgfältig lesen.
중요: 주의 깊게 읽고 나중에 참조할 수 있도록 보관하십시오

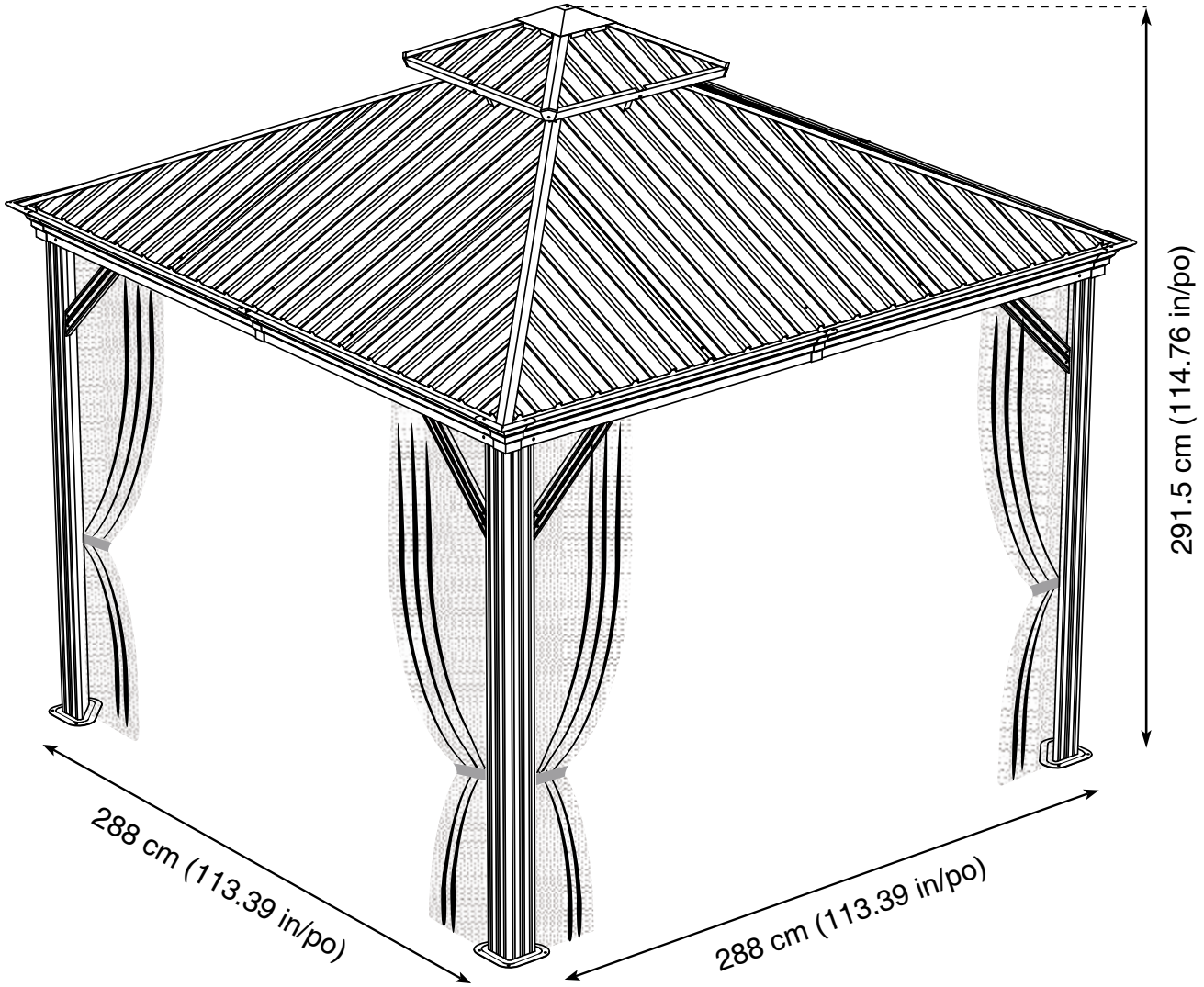

For Outdoor Use only. Not for Commercial Use.
Pour usage extérieur seulement. Pas pour usage commercial.
Solo para uso en exteriores. No para uso comercial.
Nur für den Gebrauch im Freien. Nicht für den kommerziellen Gebrauch geeignet.
이 제품은 옥외용이며 상업용이 아닙니다.

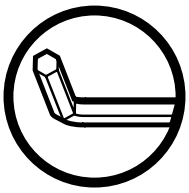

Use the hex keys in the box. / Utilisez les clés hexagonales fournies dans la boite. / Utilice las llaves hexagonales en la caja. / 상자에 육각 키를 사용 하십시오. / Verwenden Sie die Sechskantschlüssel in der Box.

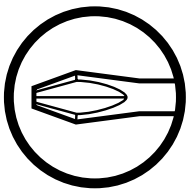

Please use a phillips screwdriver / Utilisez un tournevis de type Phillips / Por favor, use un destornillador Phillips / 십자 드라이버를 사용 하십시오. / Bitte verwenden Sie einen Kreuzschraubenzieher.

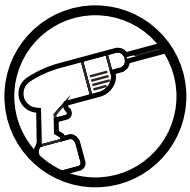

you may need to use a drill for this step. / vous pouvez avoir besoin d'utiliser une perceuse pour cette étape. / puede que tenga que utilizar un taladro para este paso. / 이 단계에선 드릴을 사용해야 할 수도 있습니다. / Für diesen Schritt können Sie einen Bohrer verwenden.

It is recommended to wear protective gloves / Le port de gants de protection est recommandé / El uso de guantes de protección se recomienda / 보호 장갑을 착용 하는 것이 좋습니다. / Das Tragen von Schutzhandschuhen wird empfohlen.

Two or more people are required at this stage. / Deux personnes ou plus sont nécessaires à cette étape./ Dos o más personas se requieren en esta etapa. / 이 단계에서는 두 명 이상 이 필요합니다. / Für diesen Bauschritt sind 2 oder mehr Personen erforderlich.

Do not screw firmly for now. / Ne pas visser fermement pour l'instant. / No atornille con firmeza por ahora. / 아직 나사를 단단히 조이지 마십시오. / Bitte die Schrauben zum jetzigen Zeitpunkt noch nicht fest anziehen.

Sold in options / Vendus en options / vendido en las opciones / 옵션 판매 / Optional erhältlich

© Sojag inc. 2019

S X 8 (EXTRA 2 pcs)

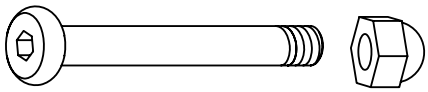

T X 56 (EXTRA 7 pcs)

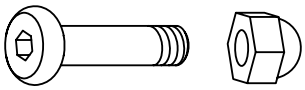

U X16 (EXTRA 2 pcs)

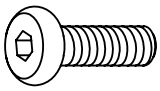

U1 X4 (EXTRA 1 pcs)

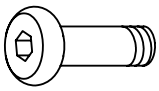

V X 184 (EXTRA 10 pcs)

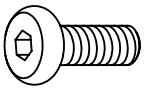

X X 16 (EXTRA 2 pcs)

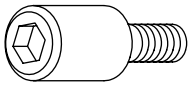

X1 X 8 (EXTRA 2 pcs)

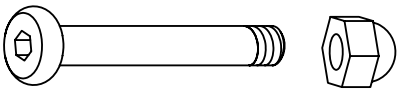

Y X 16 (EXTRA 5 pcs)

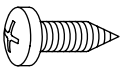

W2 X 1

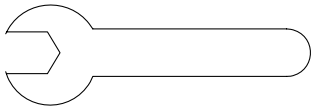

Wa X 1

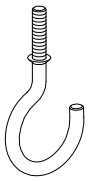

Z X 1

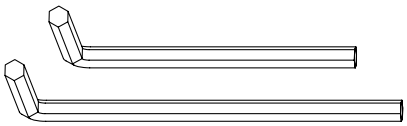

© Sojag inc. 2019

A X 4

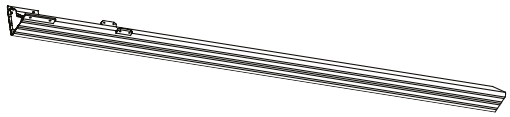

B X 4

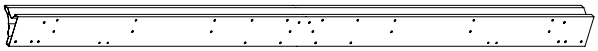

C2a X 4

C2b X 4

E X 4

E1 X 4

F3 X 4

F4 X 4

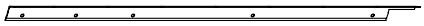

I X 8

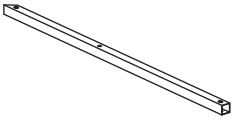

J1 X 4

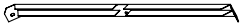

K X 1

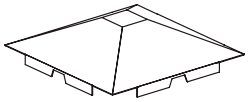

K1 X 1

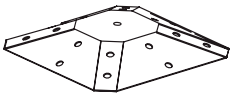

L1 X 4

L2 X 4

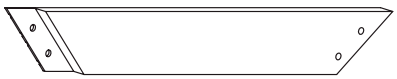

© Sojag inc. 2019

M1 X 4

M2 X 8

M3 X 4

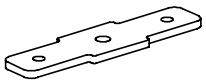

M4 X 4

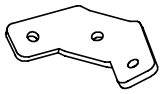

R X 56(+2)

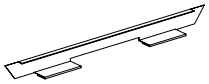

R2 X 4

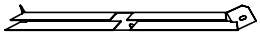

W X 4

D1 X16(+1)

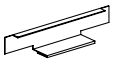

Zs X 1

Q X 48(+3) optional

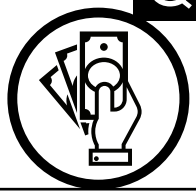

Q X 48(+3) optional

Net optional

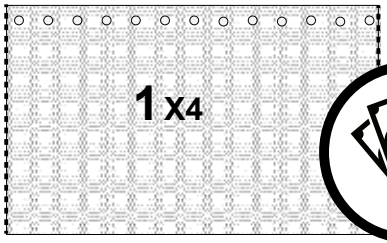

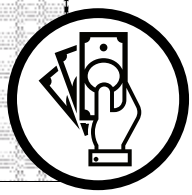

Curtain optional

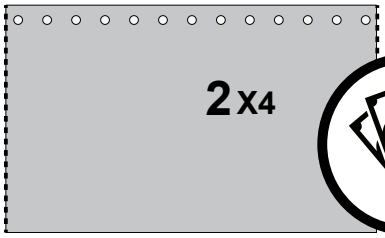

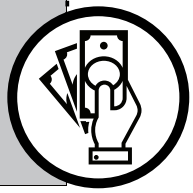

P X 4

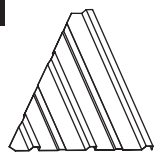

P1 X 4

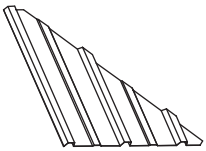

O X 4

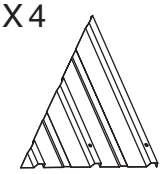

O5 X 4

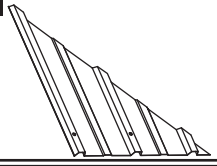

O1 X 4

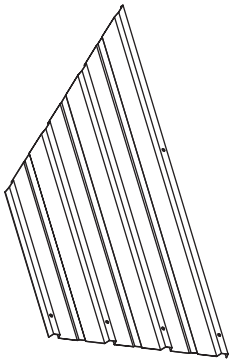

O2 X 4

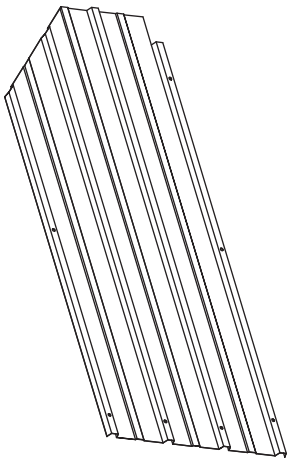

O3 X 4

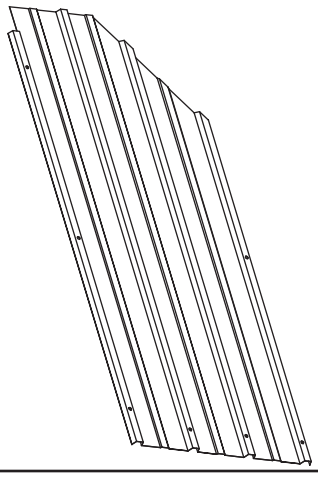

O4 X 4

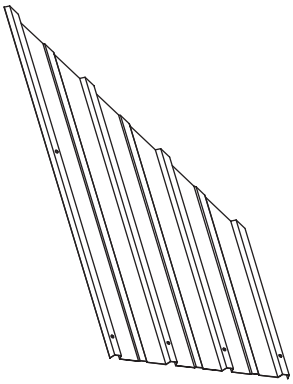

© Sojag inc. 2019

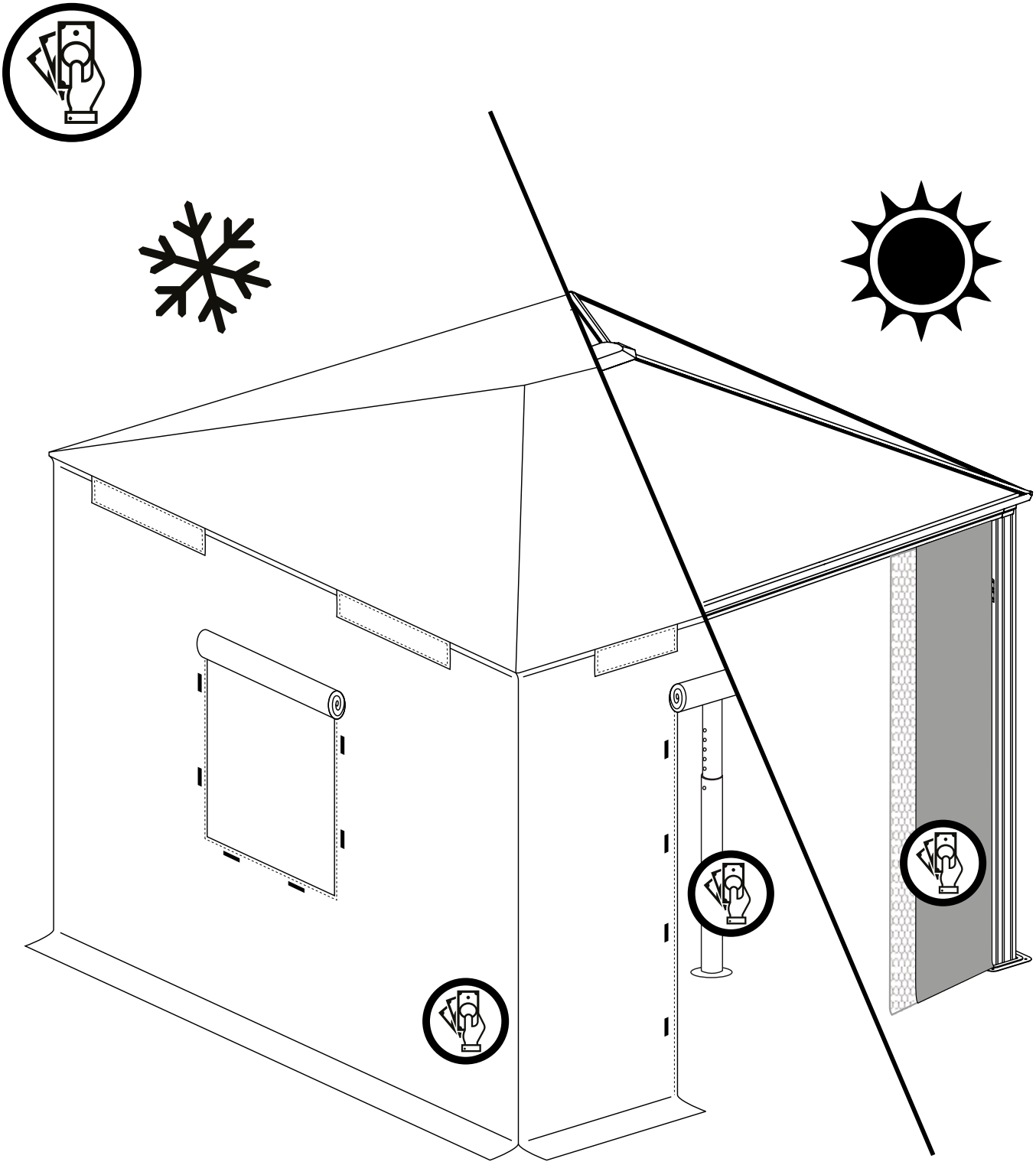

© Sojag inc. 2019

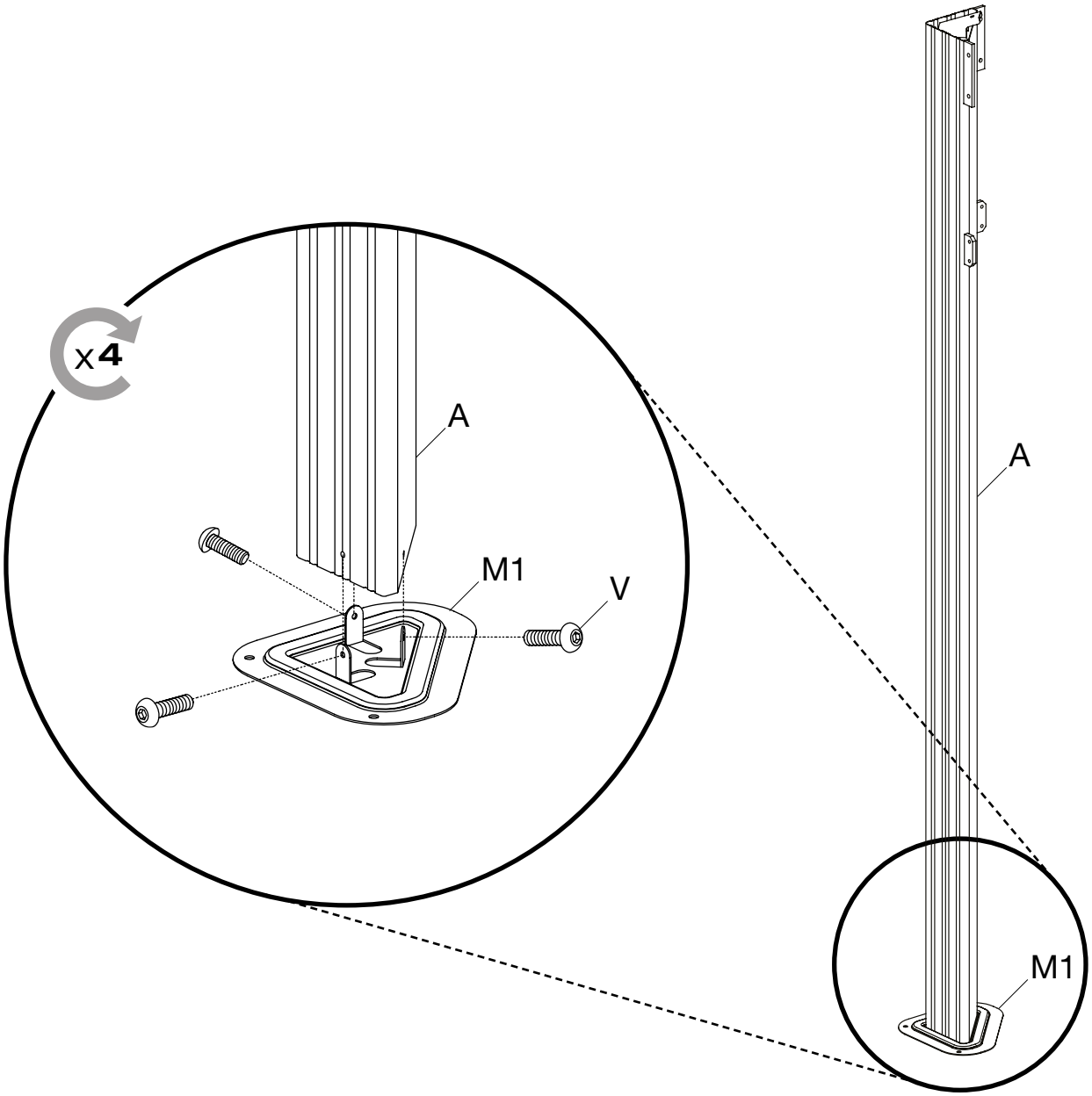

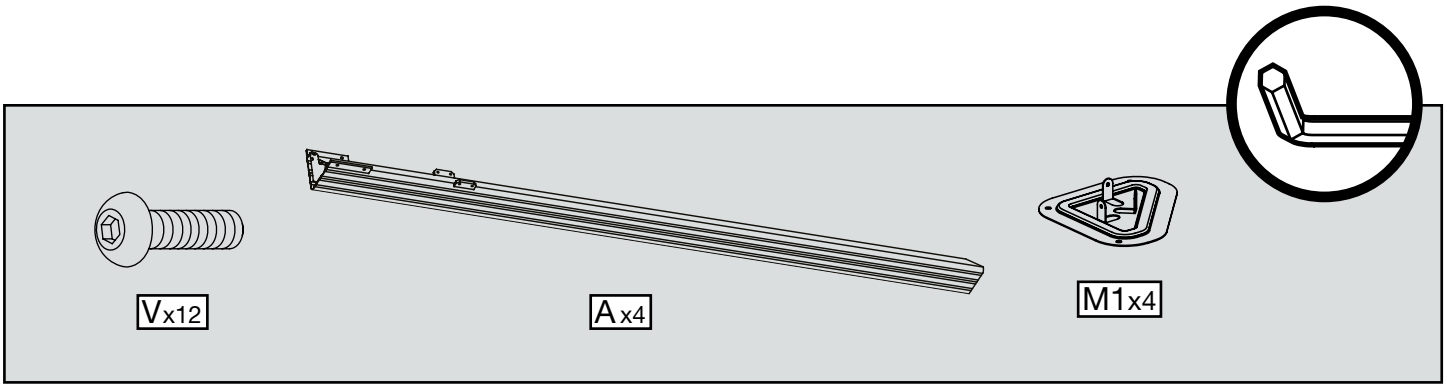

© Sojag inc. 2019

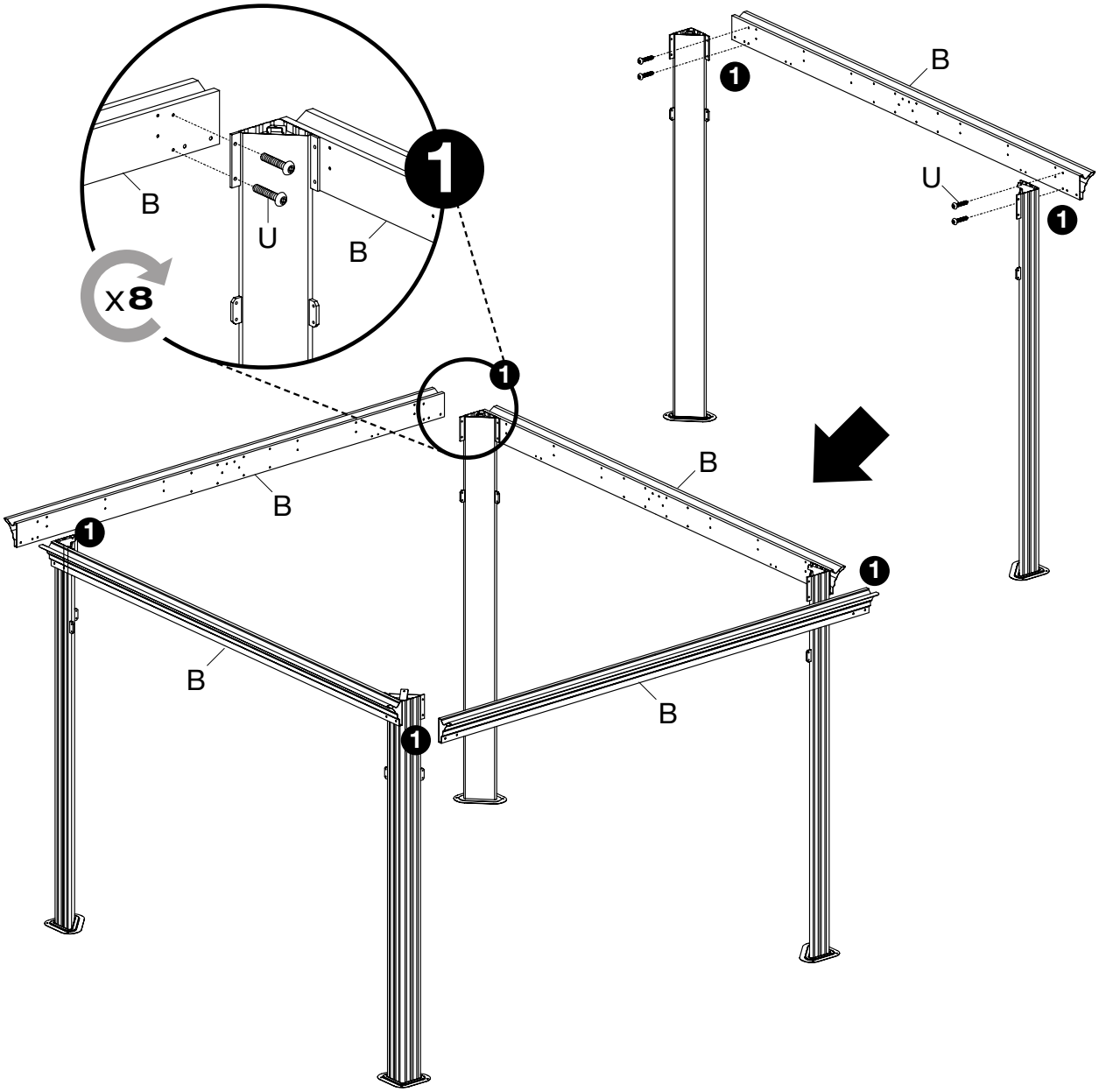

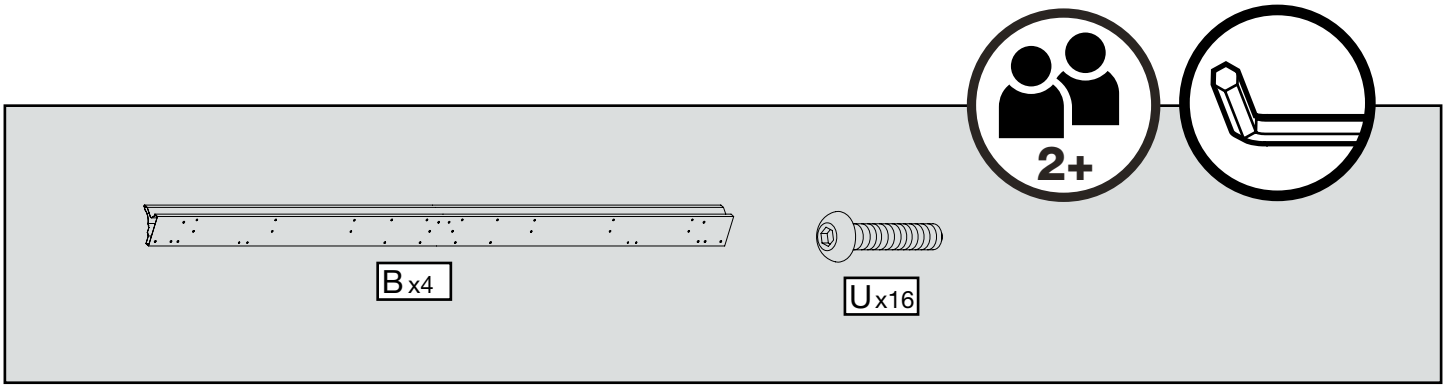

© Sojag inc. 2019

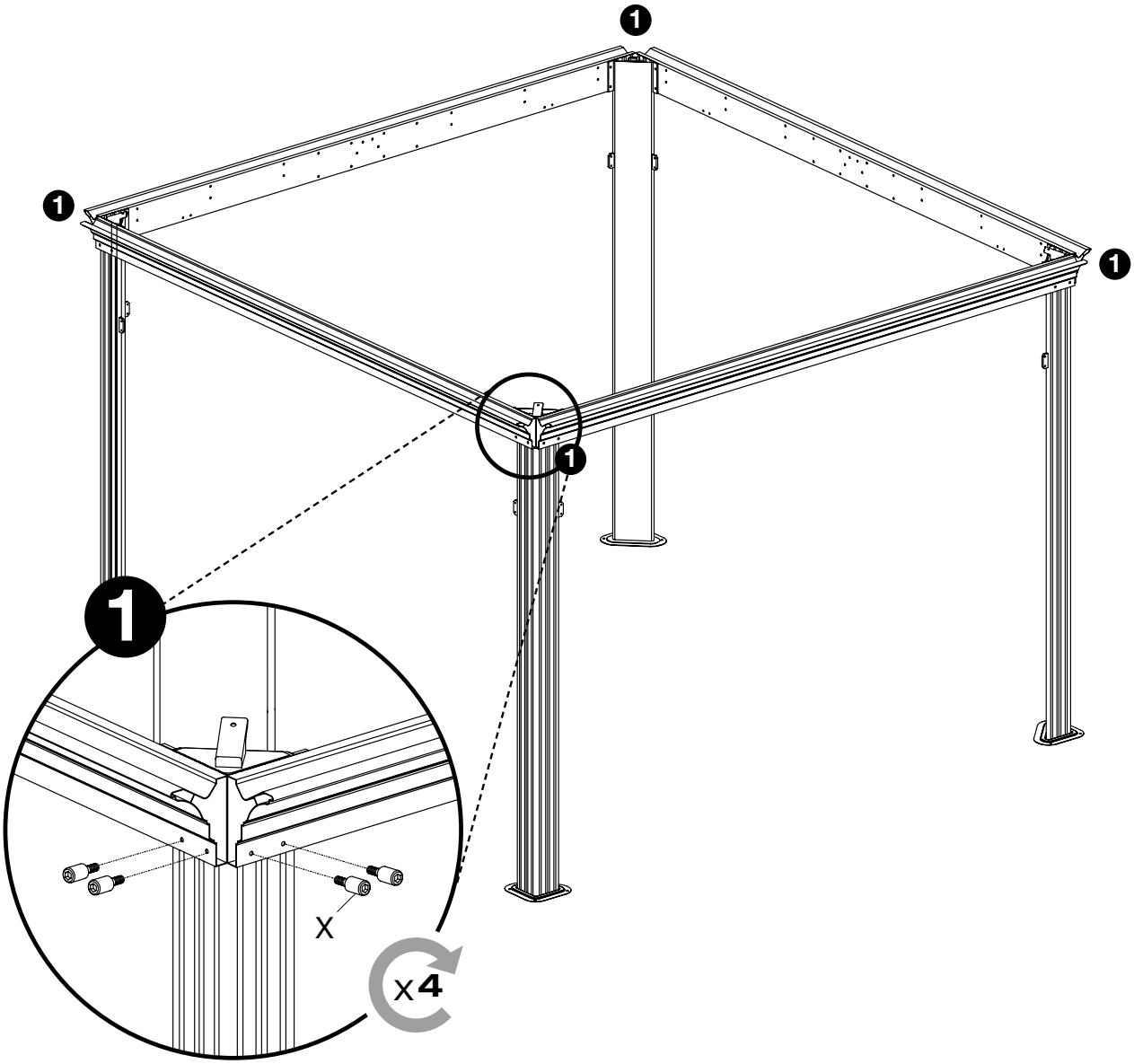

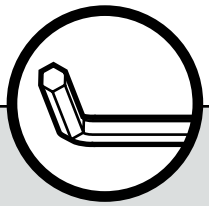

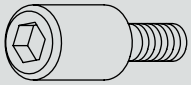

Xx16

© Sojag inc. 2019

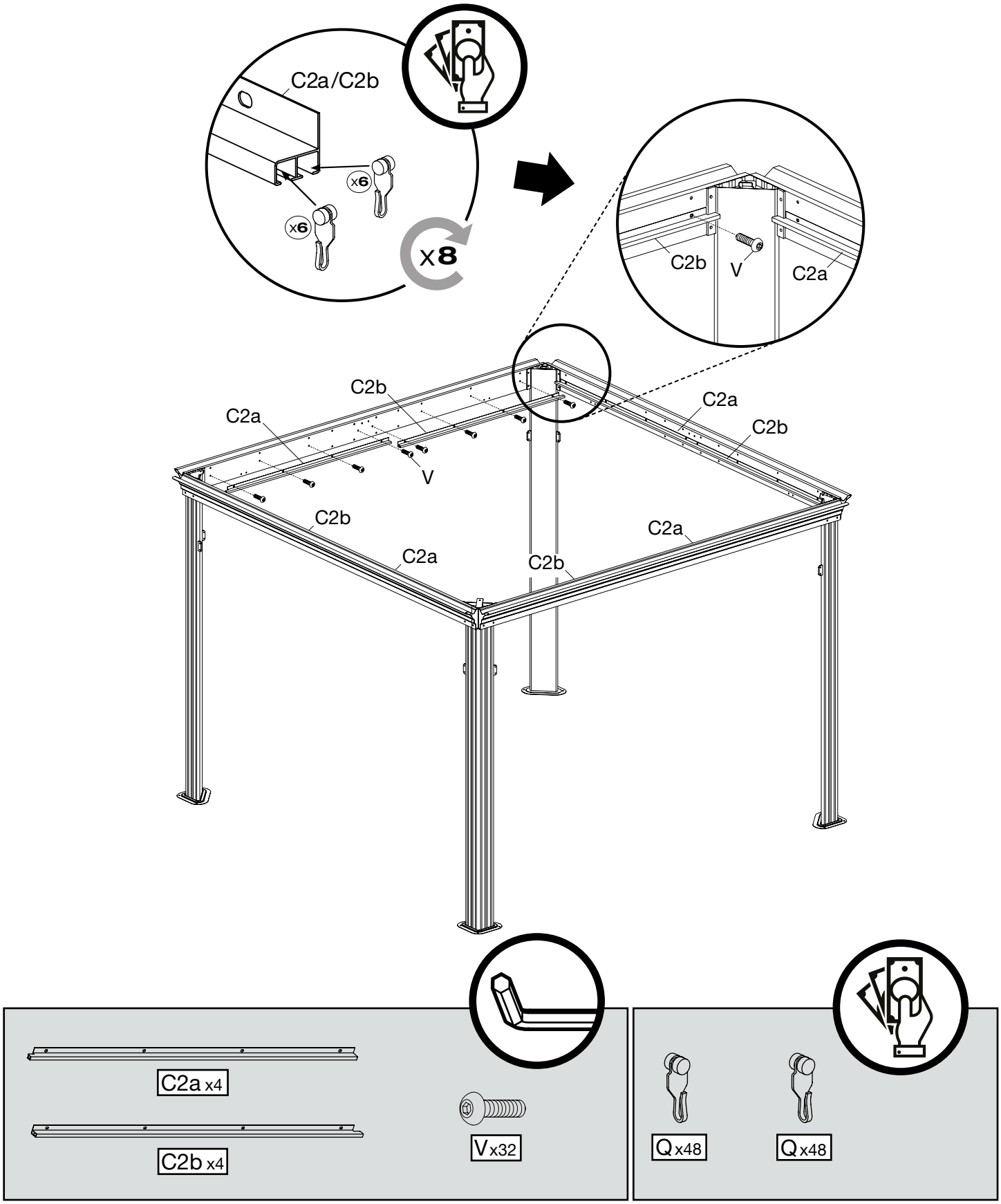

© Sojag inc. 2019

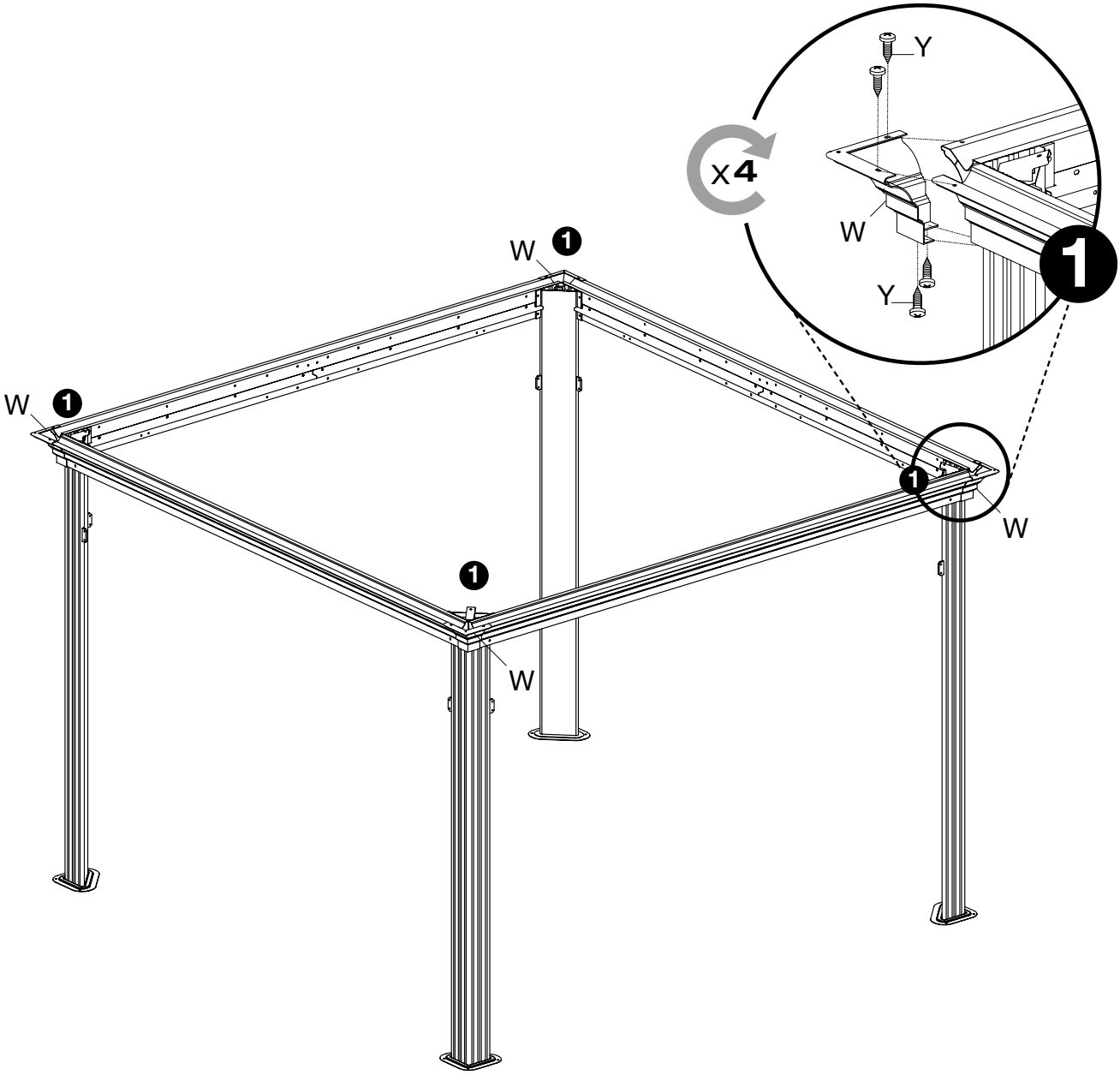

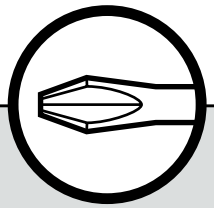

Wx4

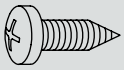

Yx16

© Sojag inc. 2019

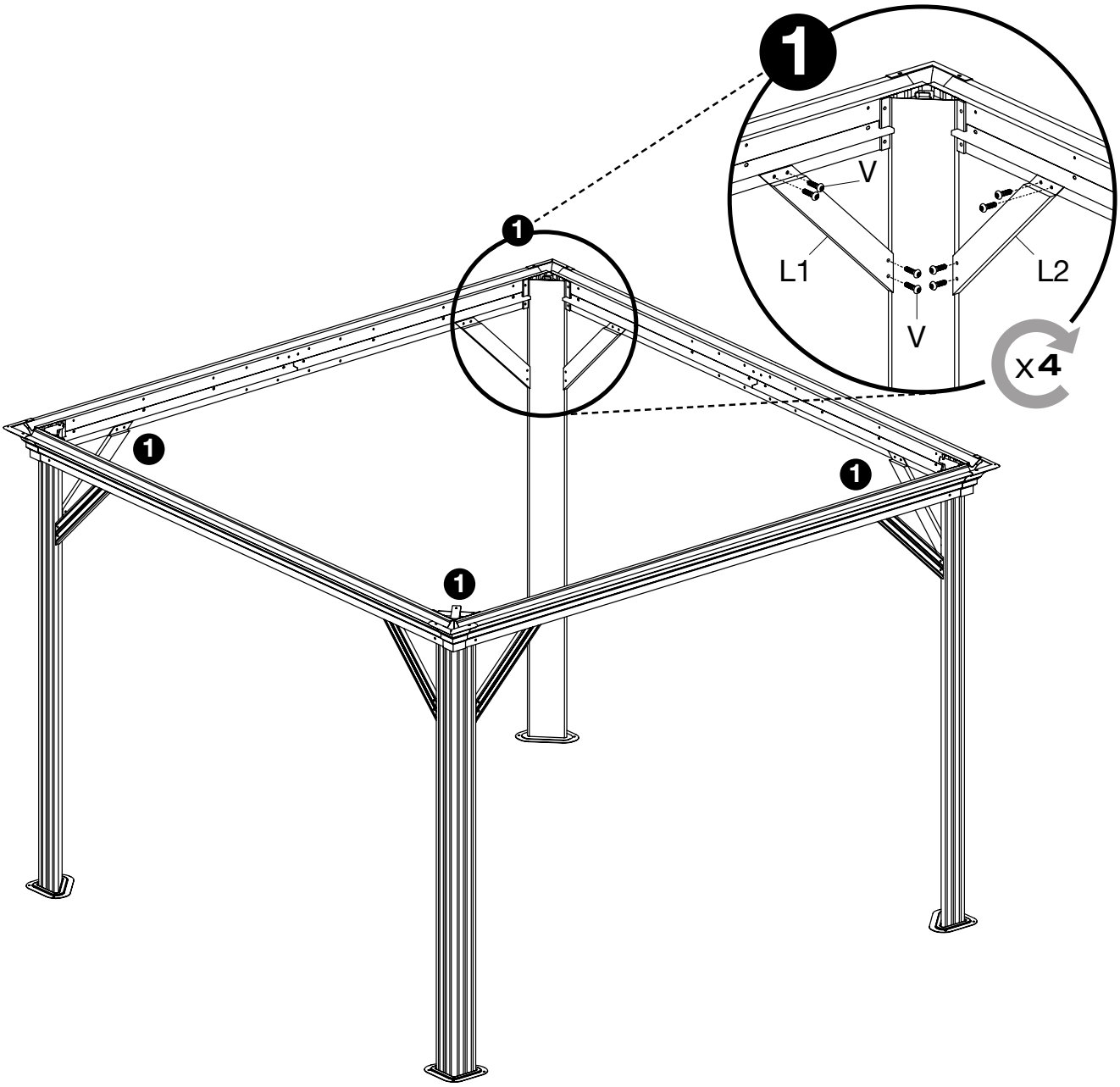

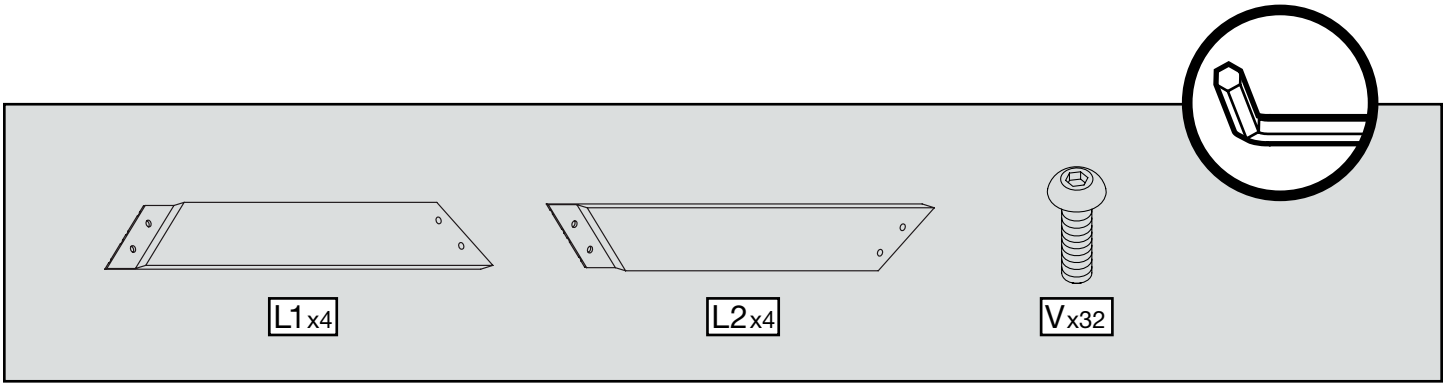

© Sojag inc. 2019

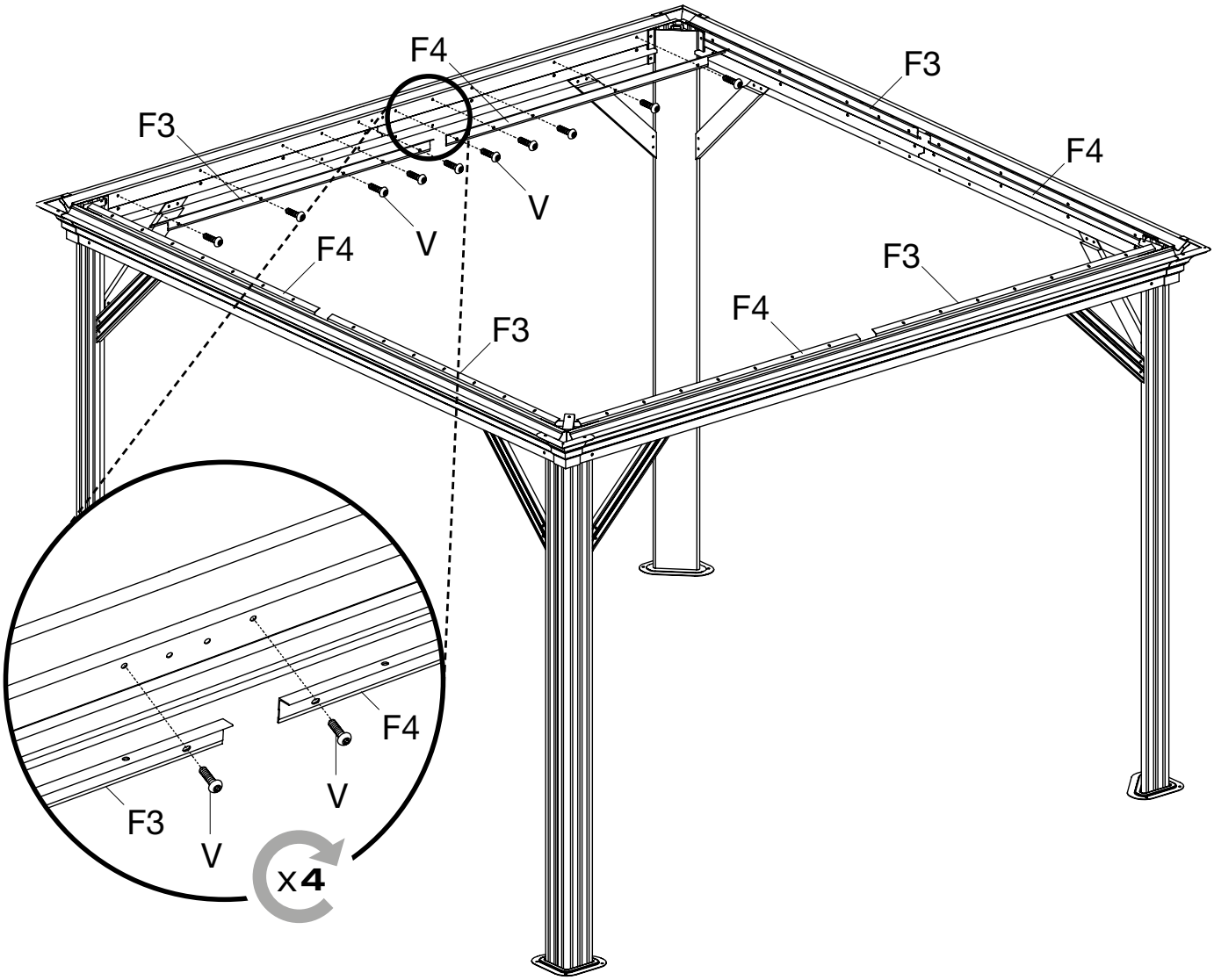

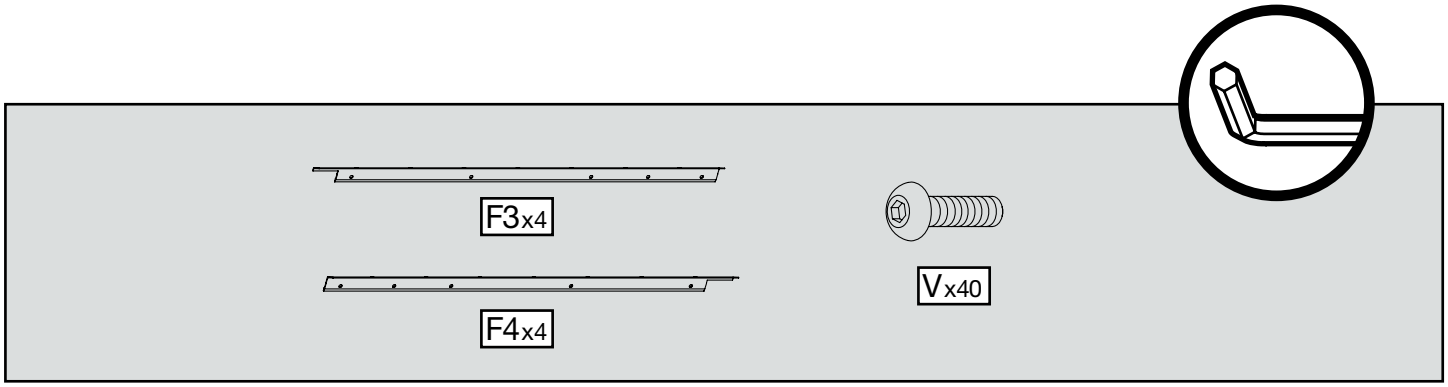

© Sojag inc. 2019

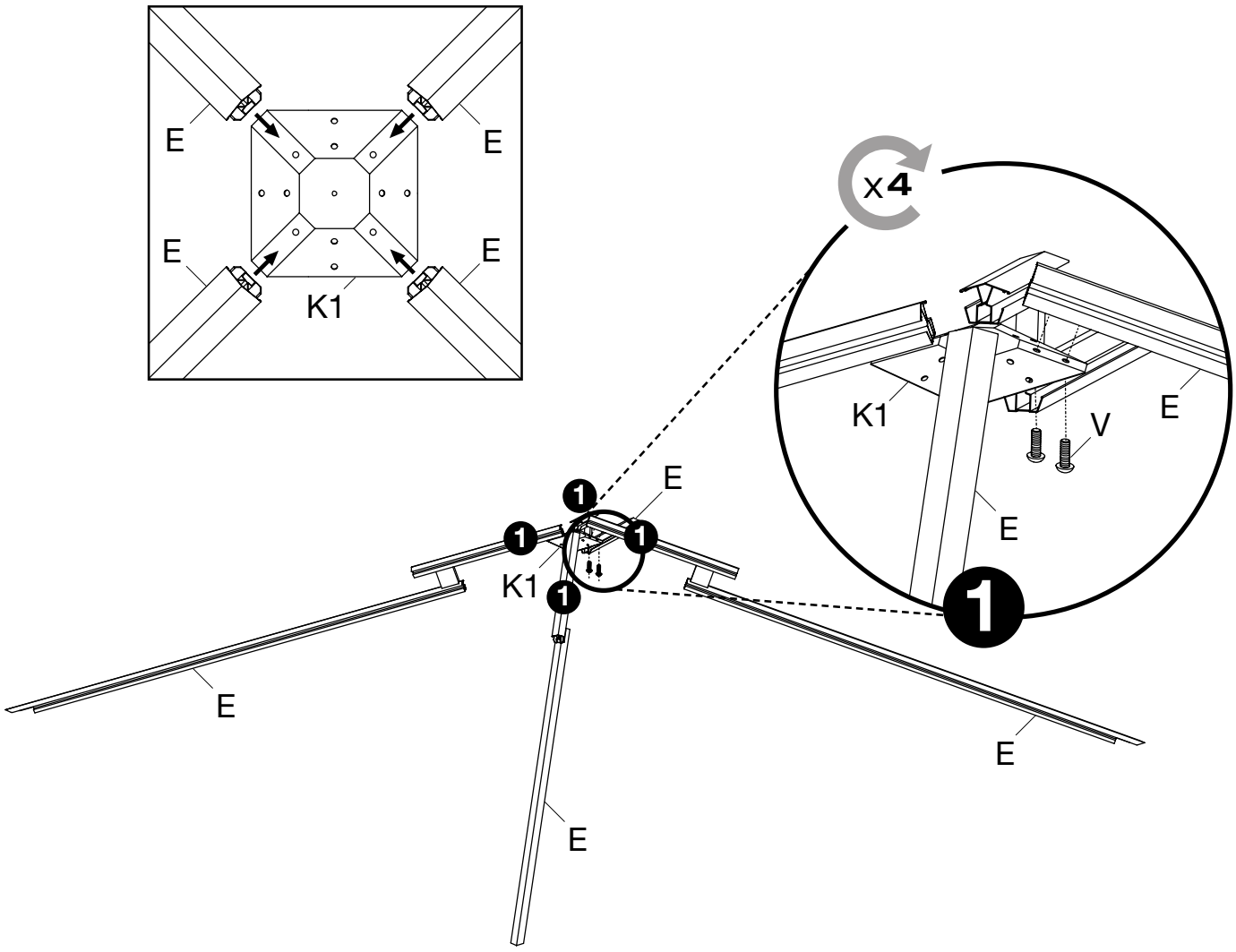

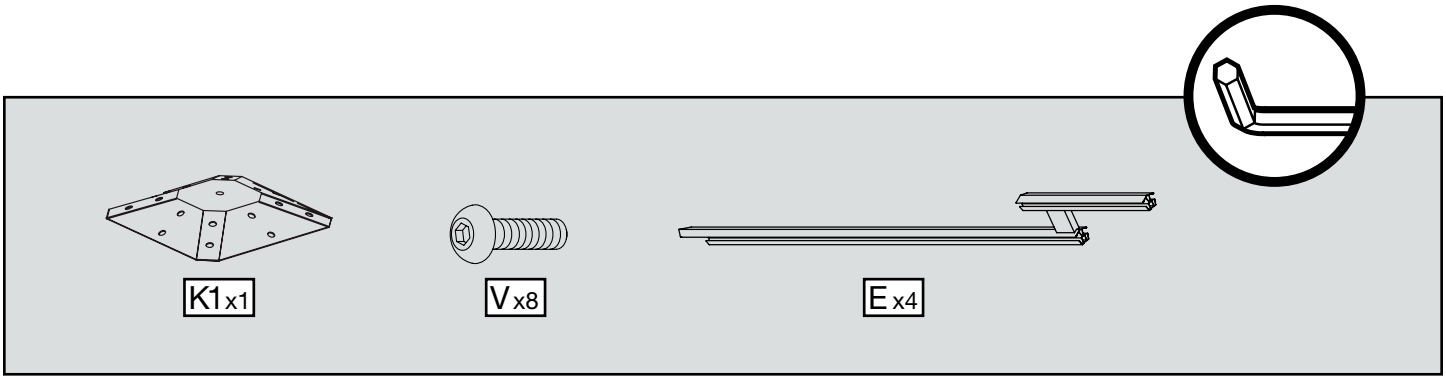

© Sojag inc. 2019

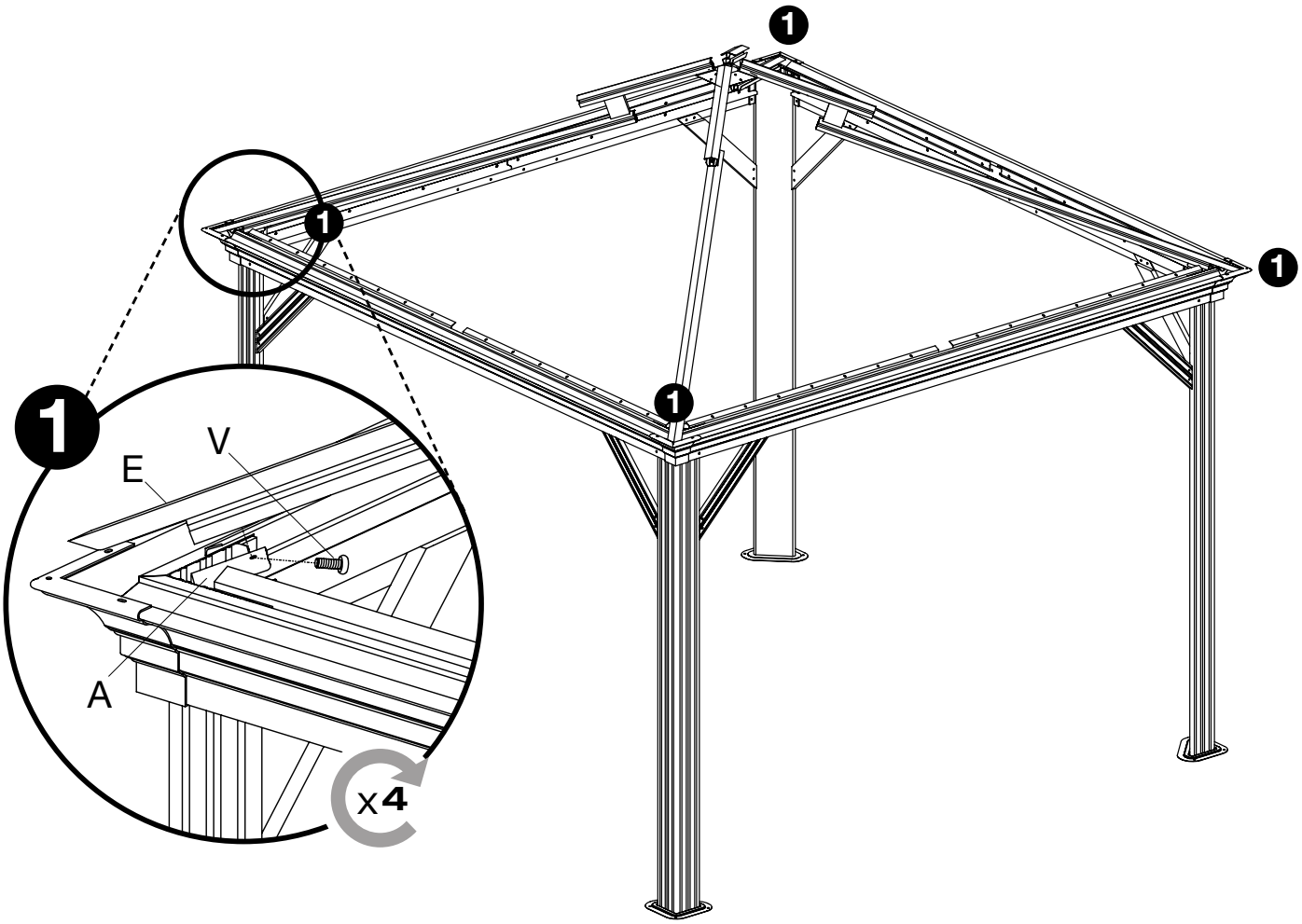

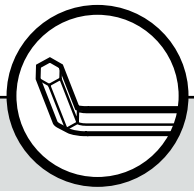

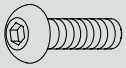

Vx4

© Sojag inc. 2019

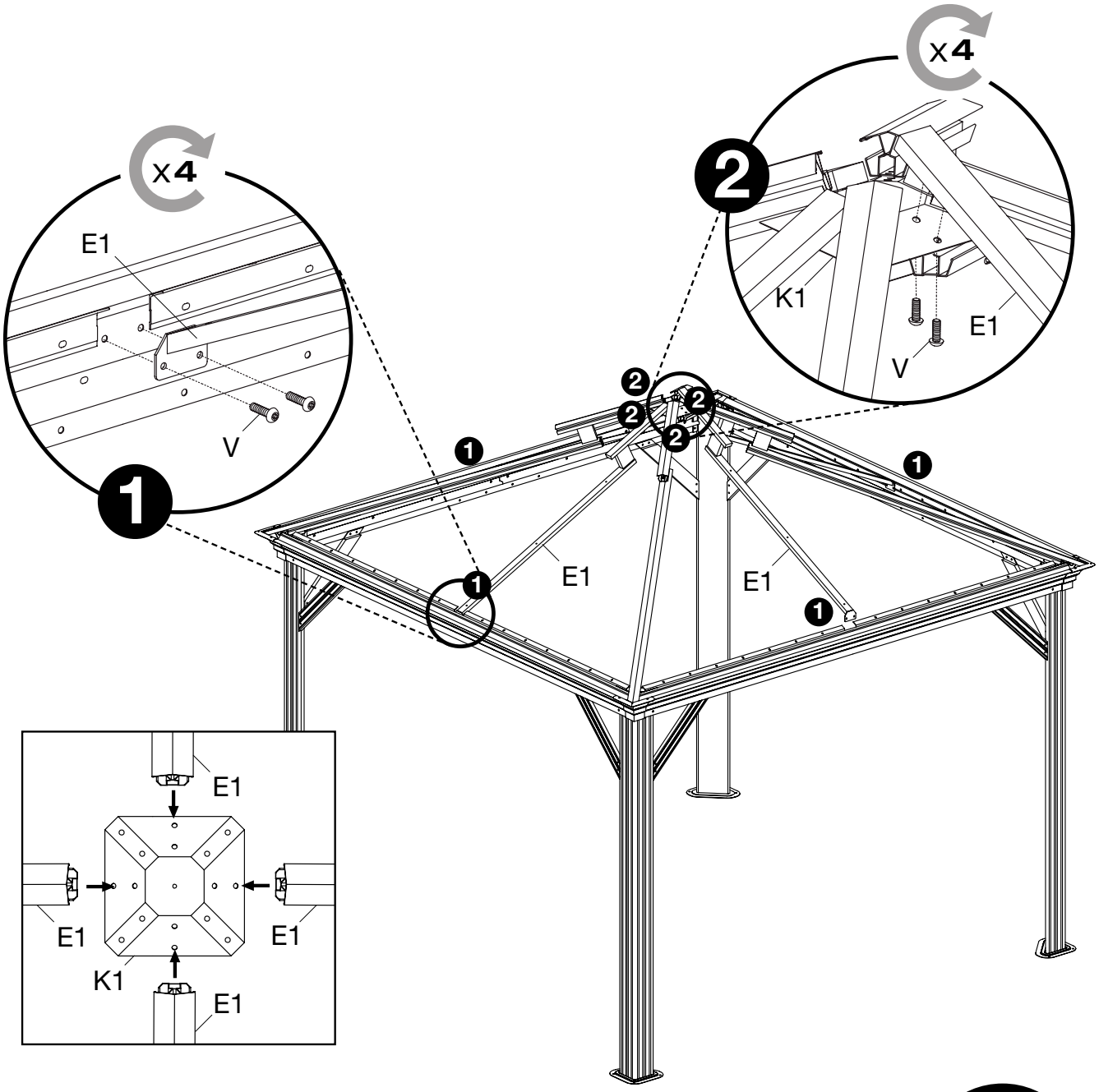

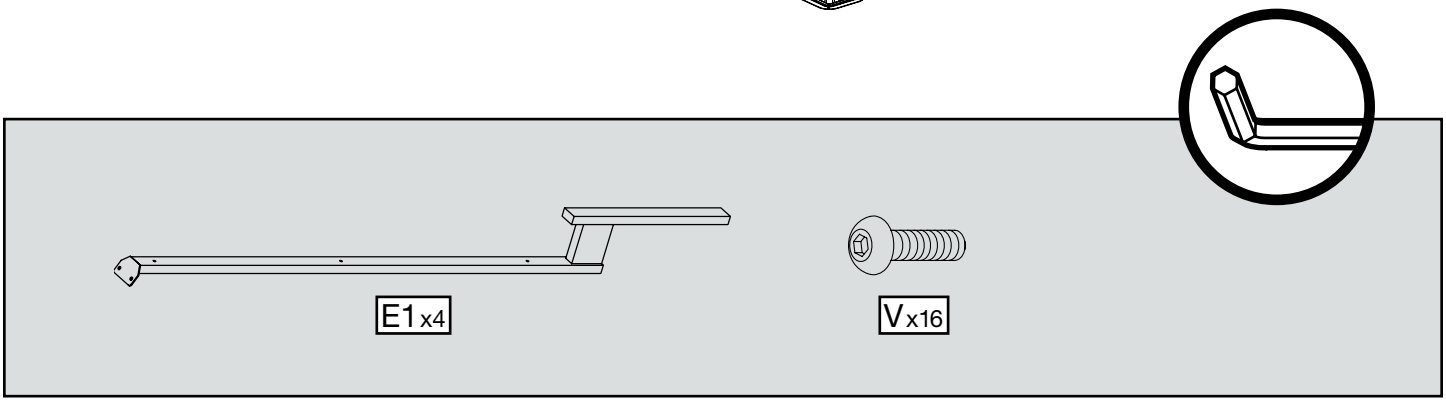

© Sojag inc. 2019

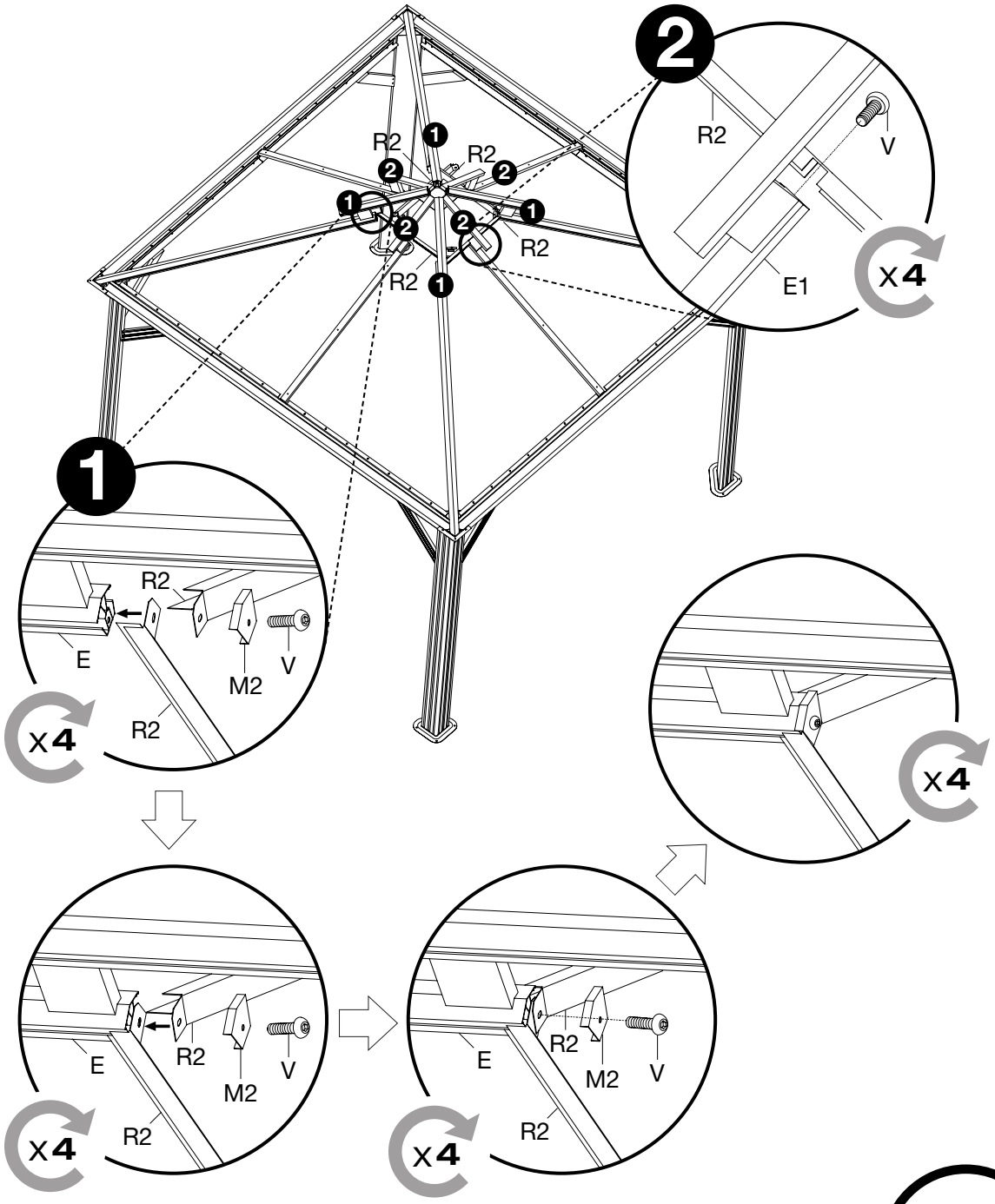

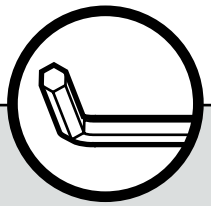

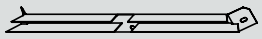

R2 x4

M2 x4

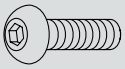

Vx8

© Sojag inc. 2019

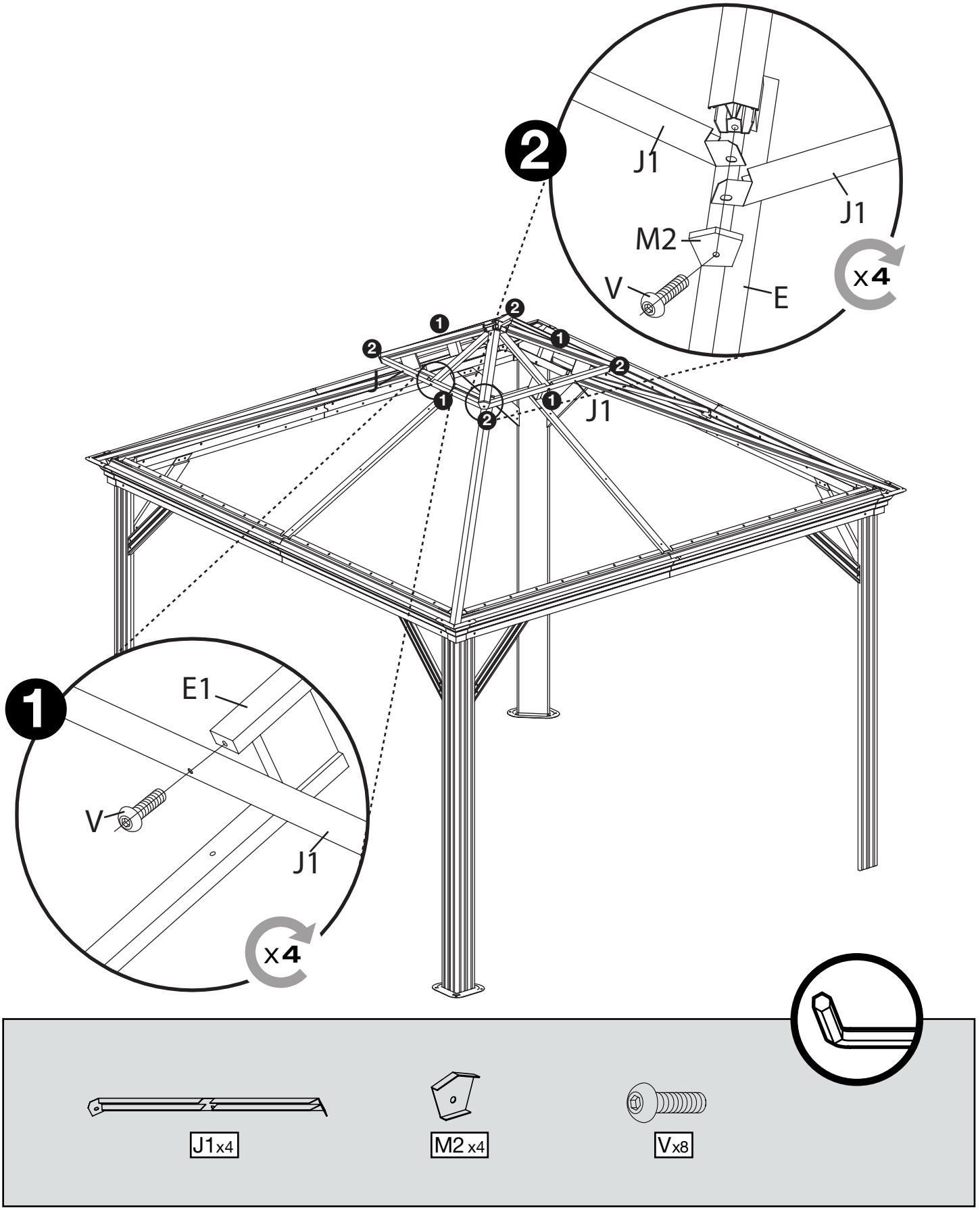

© Sojag inc. 2019

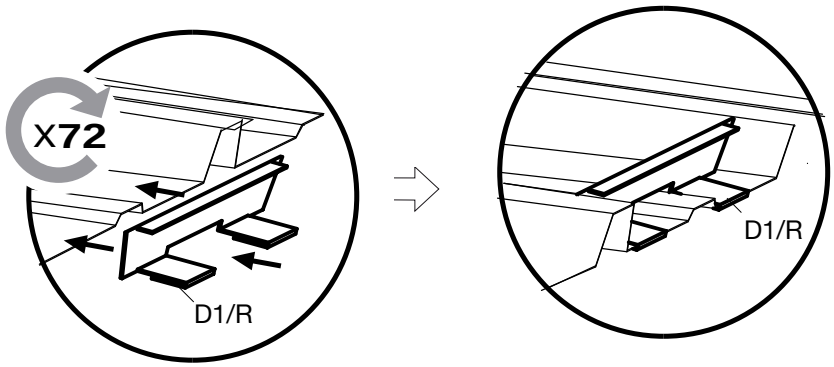

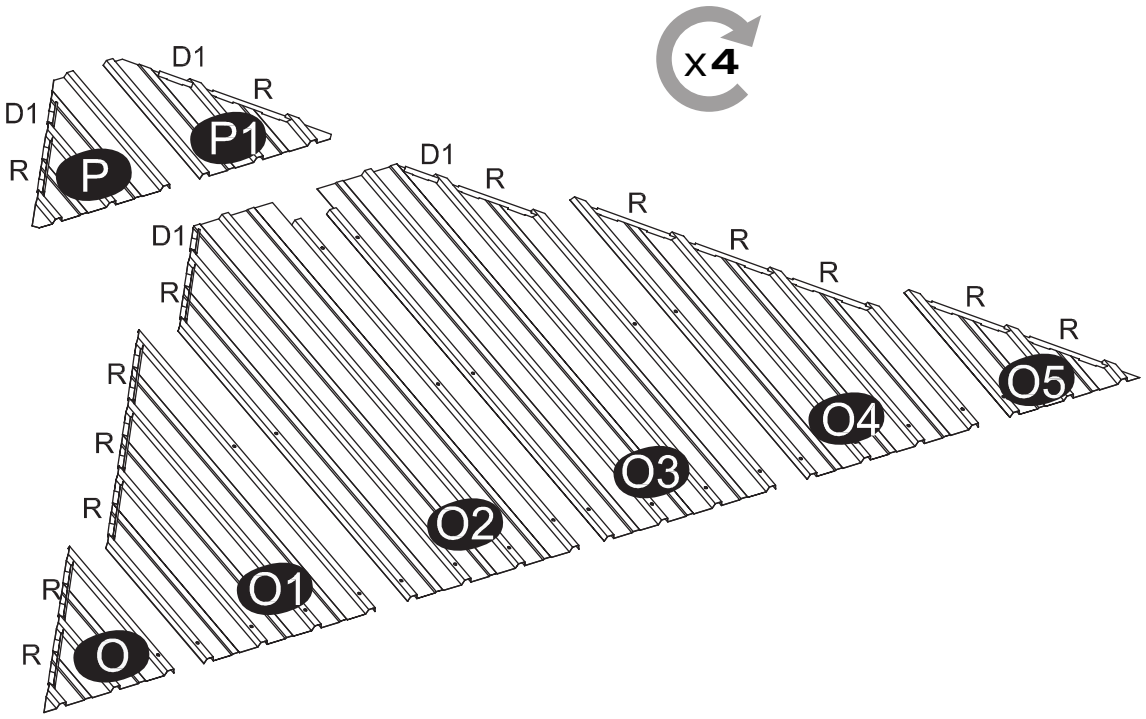

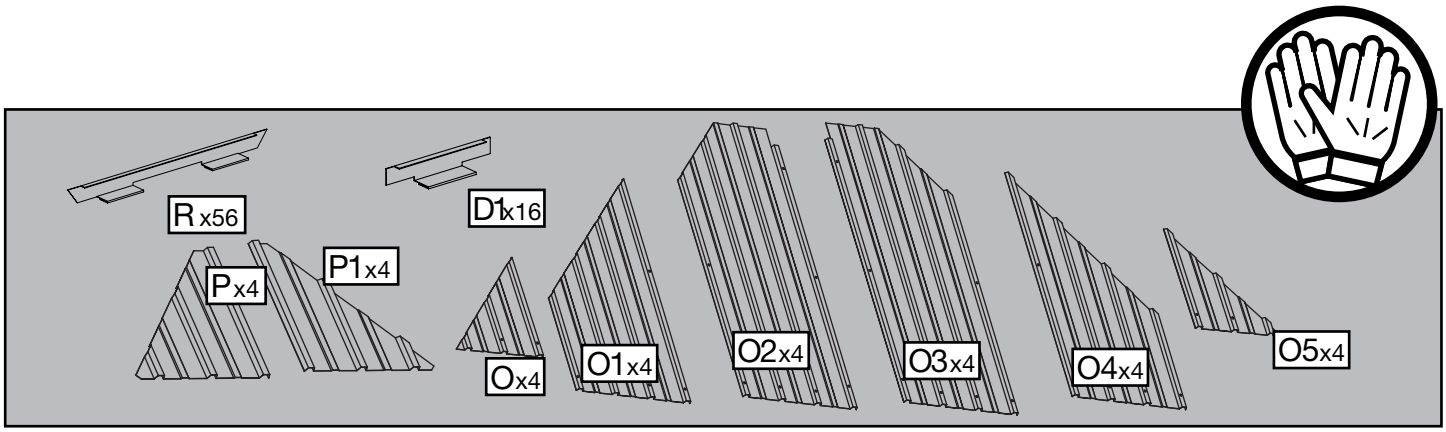

© Sojag inc. 2019

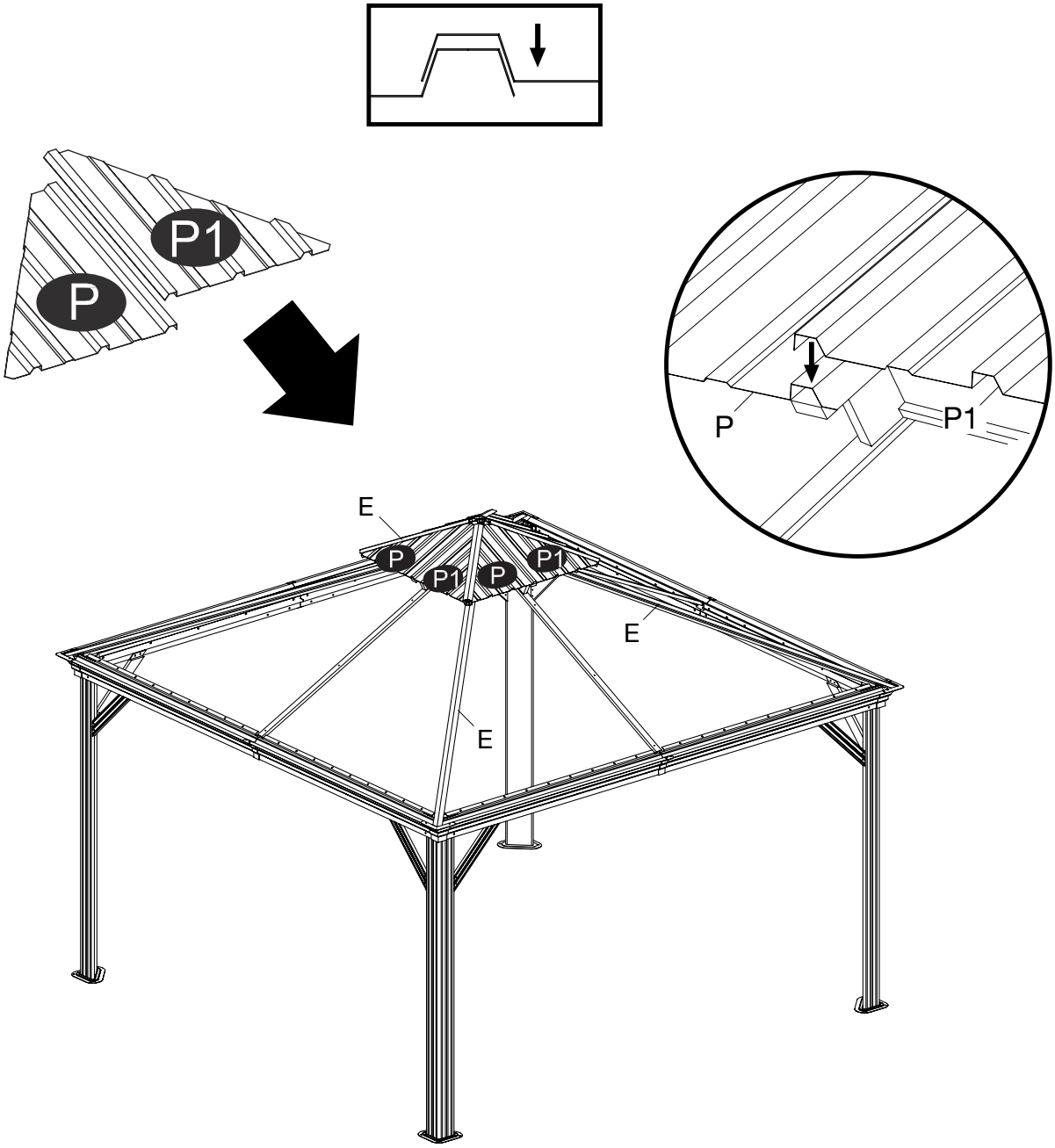

© Sojag inc. 2019

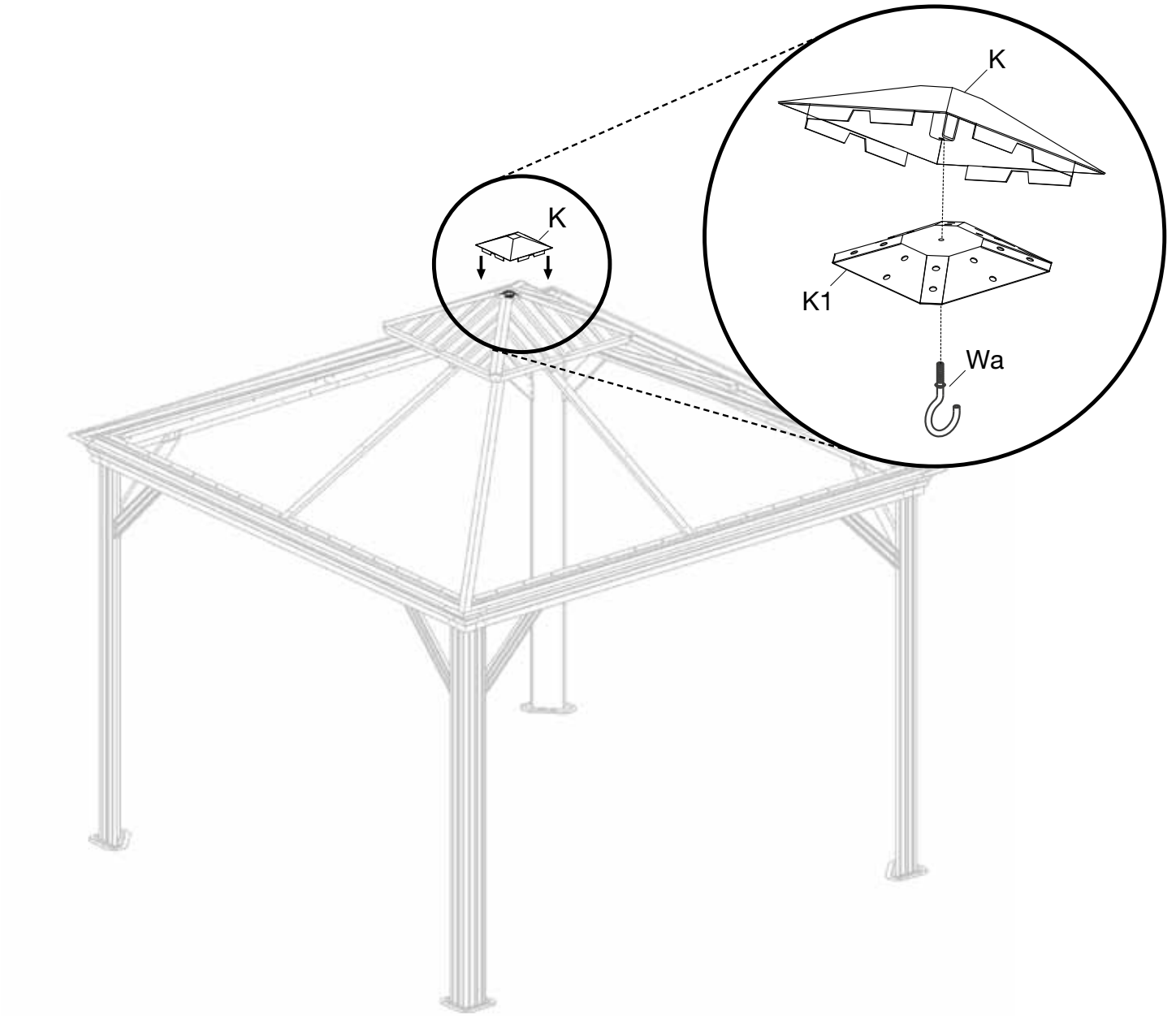

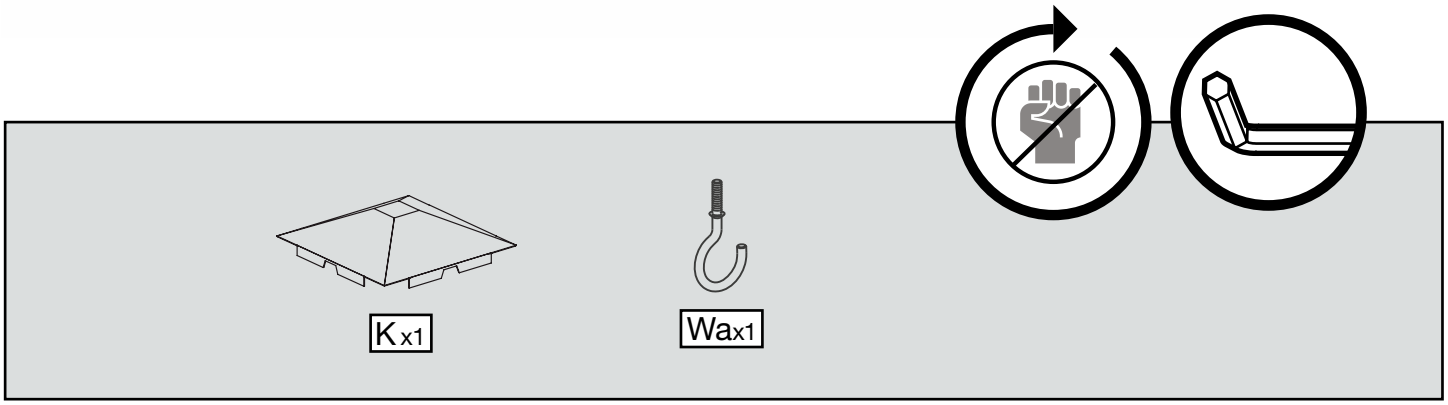

© Sojag inc. 2019

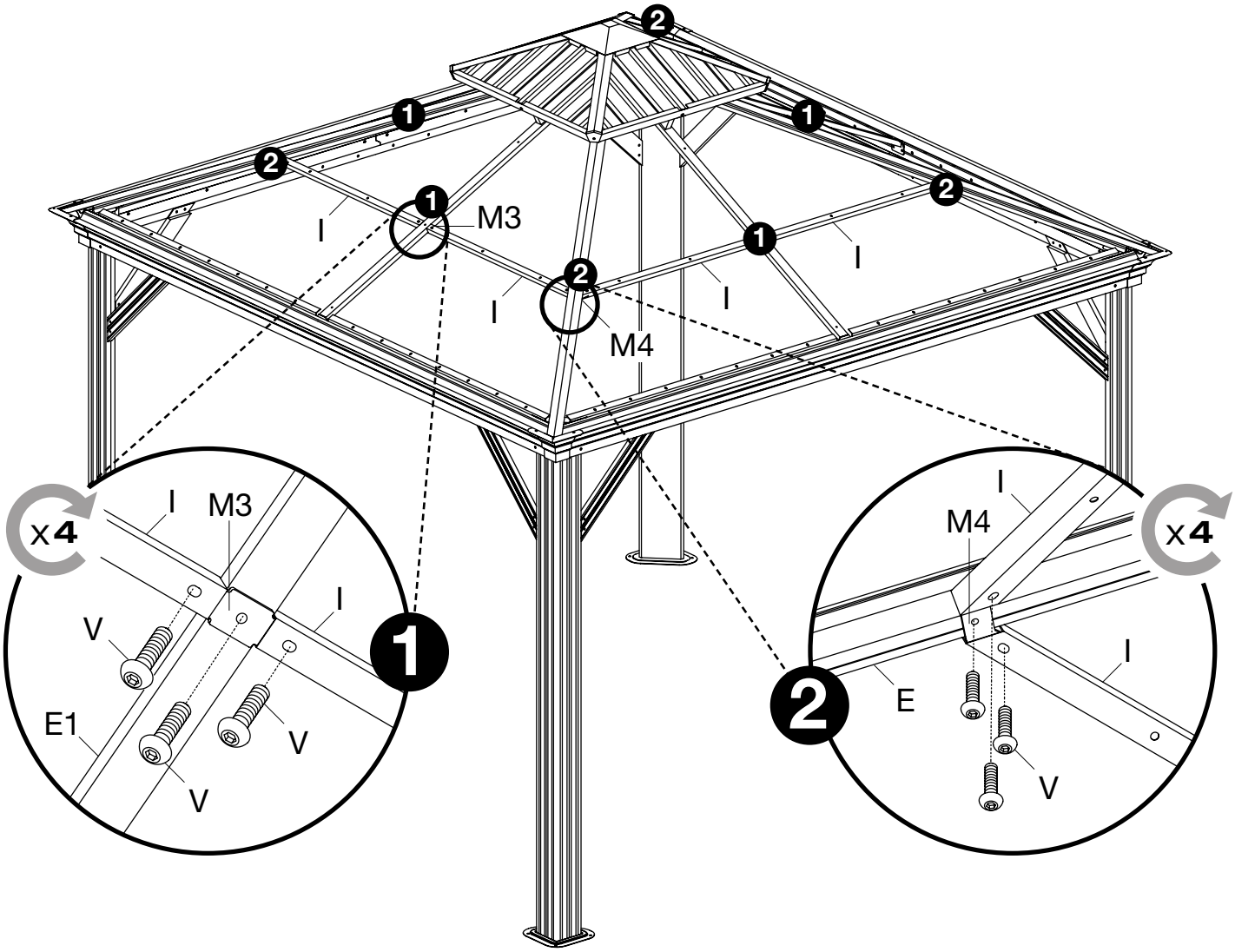

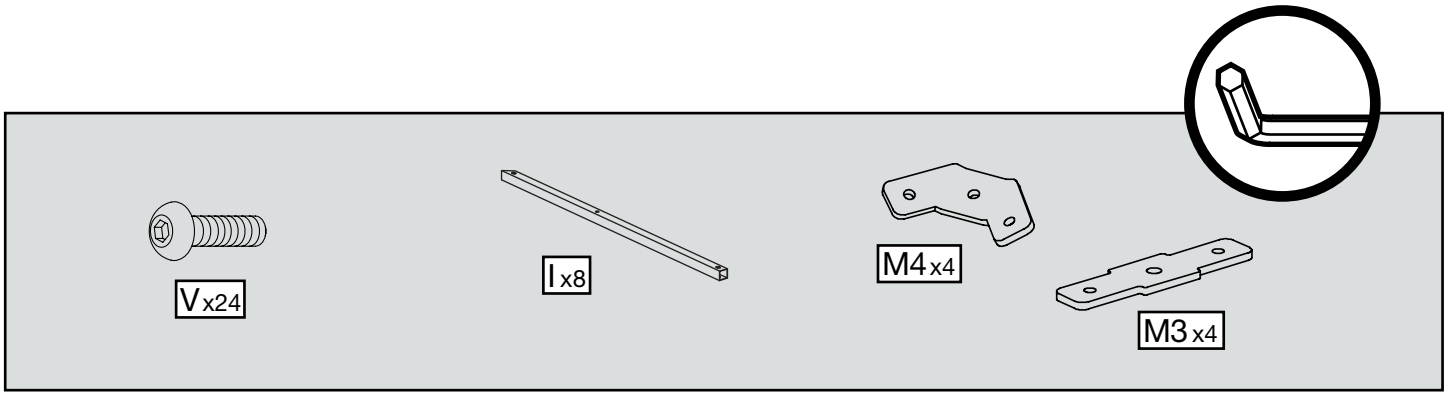

© Sojag inc. 2019

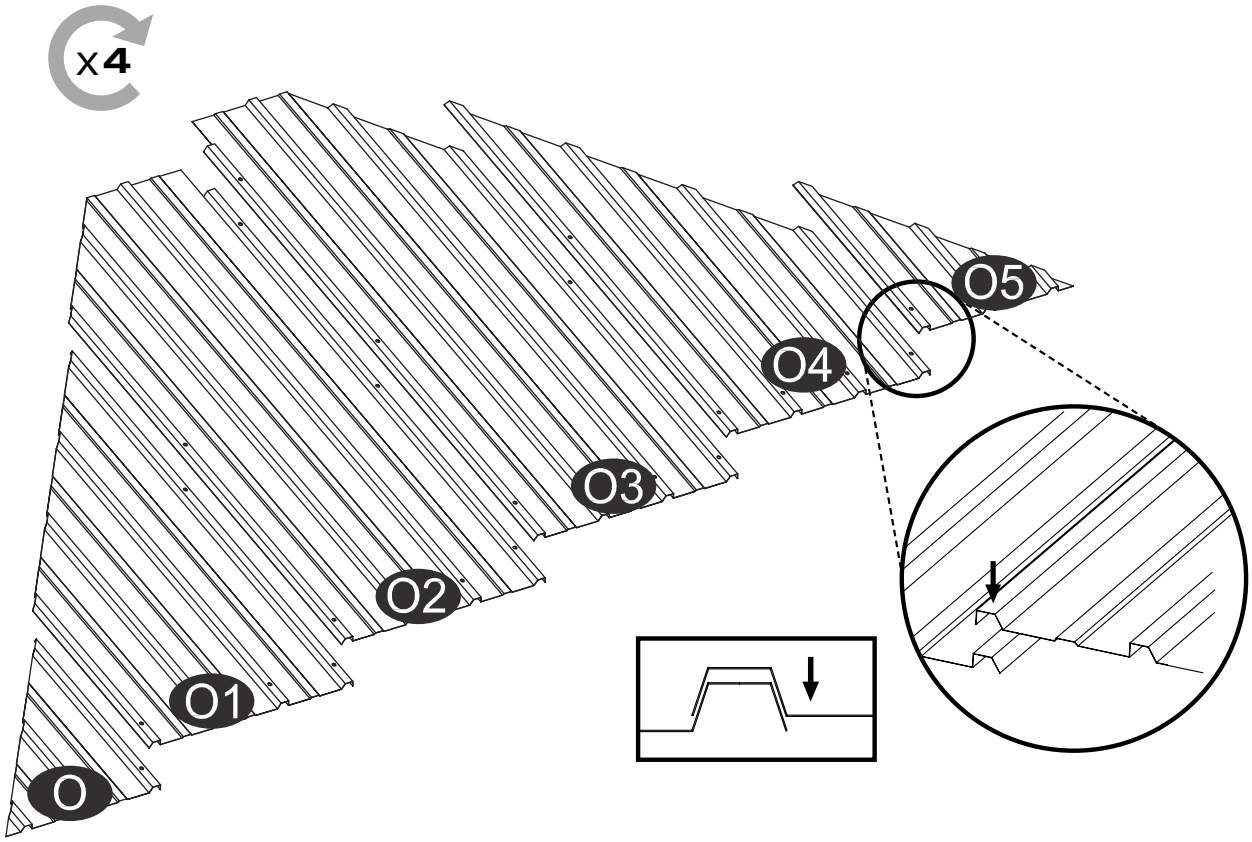

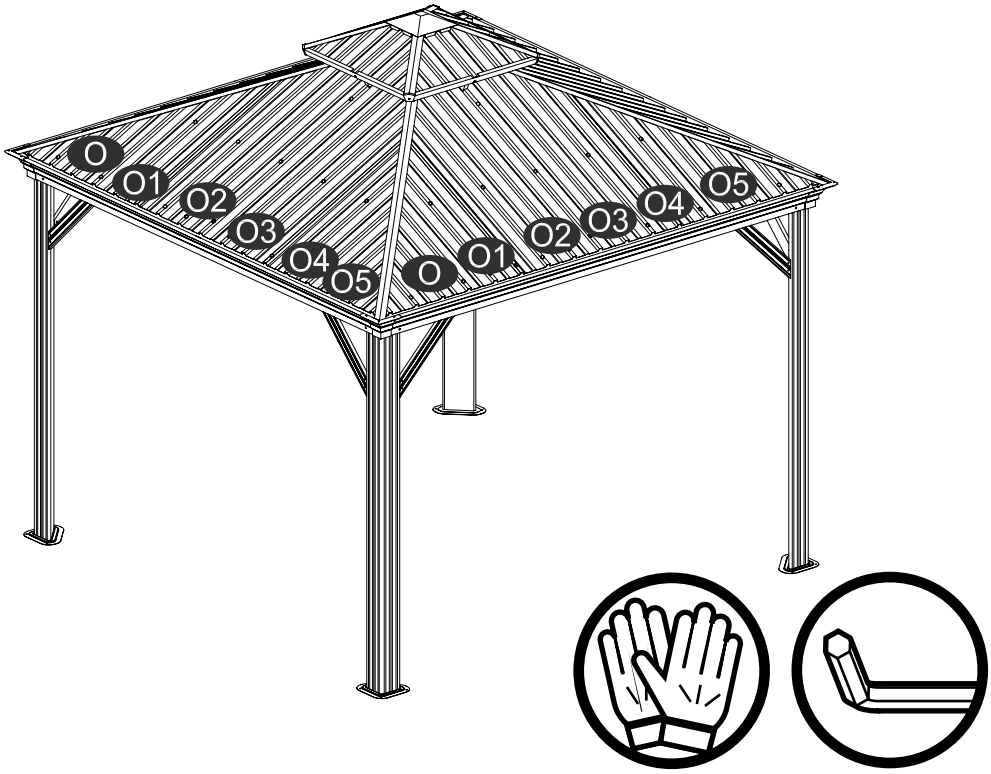

© Sojag inc. 2019

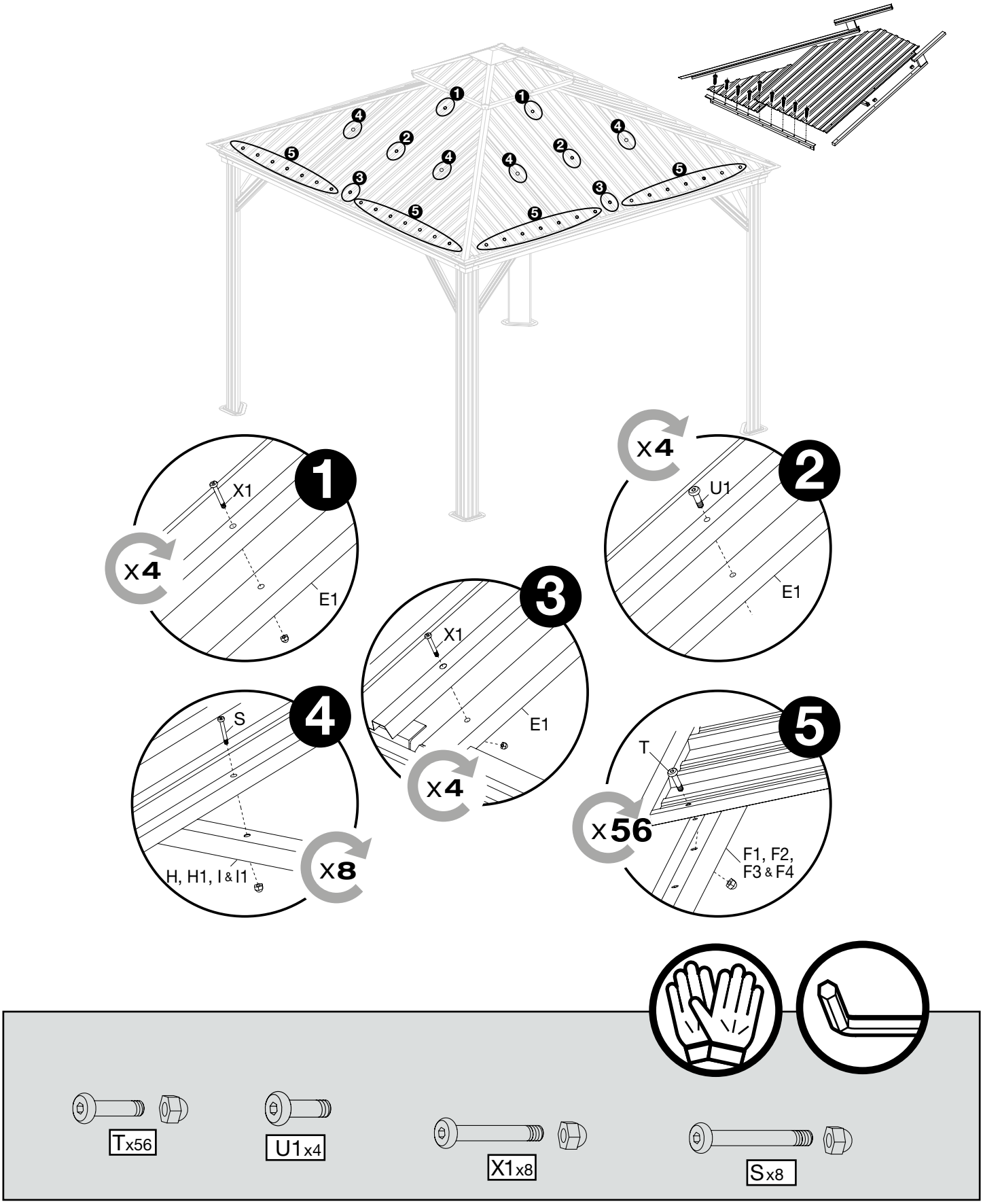

© Sojag inc. 2019

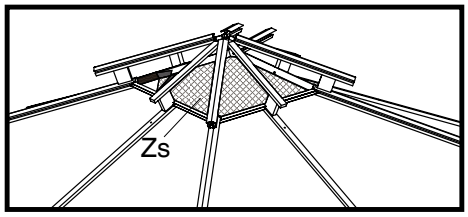

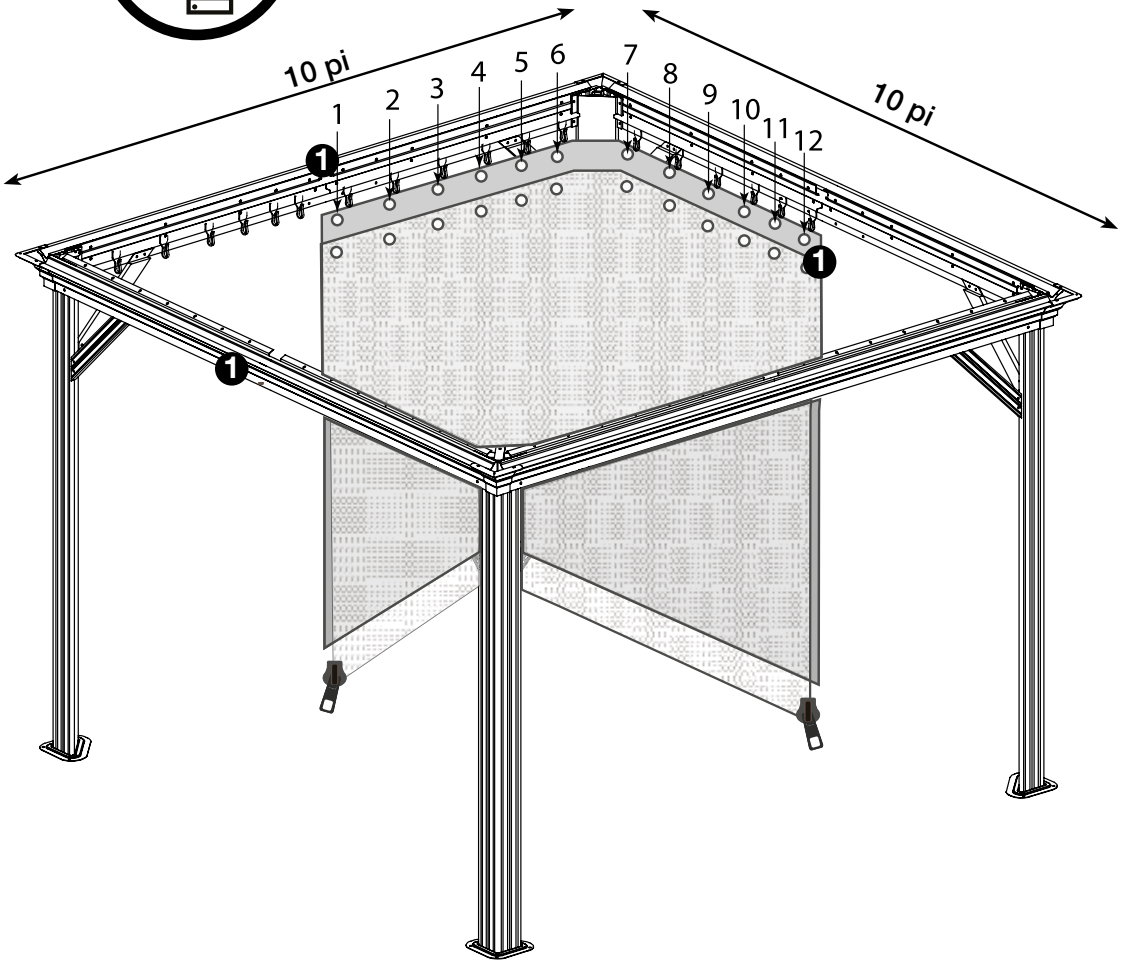

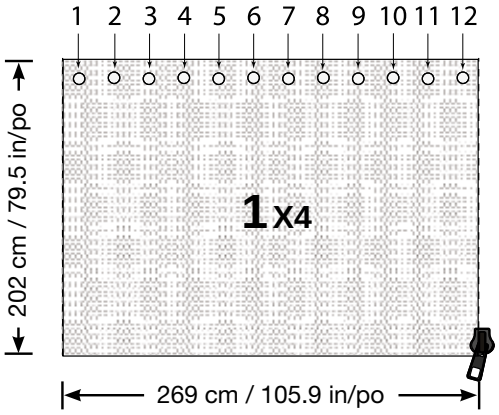

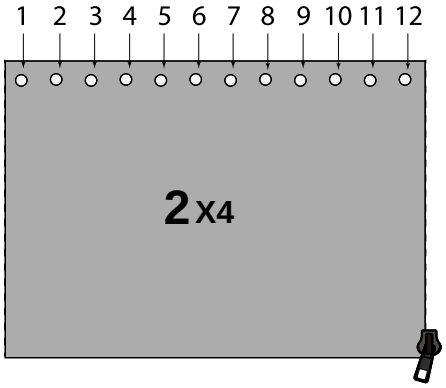

© Sojag inc. 2019

NOTES

Distributed by:
Costco Wholesale Corporation
P.O. Box 34535
Seattle, WA 98124-1535
USA
1-800-774-2678
www.costco.com

Imported by / Importé par :
Costco Wholesale Canada Ltd.*
415 W. Hunt Club Road
Ottawa, Ontario
K2E 1C5, Canada
1-800-463-3783
www.costco.ca
* faisant affaire au Québec sous le nom Les Entrepôts Costco

Importado por:
Importadora Primex S.A. de C.V.
Blvd. Magnocentro No.4
San Fernando La Herradura
Huixquilucan, Estado de México
C.P.52765
RFC: IPR-930907-S70
(55)-5246-5500
www.costco.com.mx

Imported by:
Costco Wholesale UK Ltd /
Costco Online UK Ltd
Hartspring Lane
Watford, Herts
WD25 8JS
United Kingdom
01923 213113
www.costco.co.uk

Imported by:
Costco Wholesale Australia Pty Ltd
17-21 Parramatta Road
Lidcombe NSW 2141
Australia
www.costco.com.au

Imported by / Distributed by:
Shanghai Minhang Costco Trading Co., Ltd
Unit 109, No 388, Lian You Road
Minhang District, Shanghai
China 201107
+86-21-6257-7065

Distribué par:
Costco France
1, avenue de Bréhat
91140 Villebon-sur-Yvette (France)
01 80 45 01 10
www.costco.fr

Importado por:
Costco Wholesale Spain, S.L.U.
Polígono Empresarial Los Gavilanes
C/ Agustín de Betancourt, 17
28906 Getafe (Madrid) España
NIF: B86509460
900 111 155
www.costco.es

Imported and Distributed by:
Costco Wholesale Korea, Ltd.
40, Iljik-ro
Gwangmyeong-si
Gyeonggi-do,14347, Korea
1899-9900
www.costco.co.kr

Imported by:
Costco Wholesale Japan Ltd.
3-1-4 Ikegami-Shincho
Kawasaki-ku, Kawasaki-shi,
Kanagawa 210-0832 Japan
044-281-2600
www.costco.co.jp

Imported by / Manufactured for:
Costco President Taiwan, Inc.
No. 656 Chung-Hwa 5th Road
Kaohsiung, Taiwan
Company Tax ID: 96972798
449-9909 or 02-449-9909 (if cellphone)
www.costco.com.tw

Distributed by:
Costco Wholesale Iceland ehf.
Kauptún 3-7, 210 Gardabaer
Iceland
www.costco.is

MADE IN CHINA
FABRIQUÉ EN CHINE
HECHO EN CHINA

SOJAG

produits saisonniers • seasonal products

© Sojag inc. 2019